Rockwell International

Collins instruction book

Collins Radio Group

831G-2 20-kW and 831G-2B 22.5-kW FM Transmitters

USER MANUAL WIKI.COM

www.SteamPoweredRadio.com

523-0563841-00143A
15 September 1975

Rockwell International

Collins instruction book

831G-2 20-kW and 831G-2B 22.5-kW FM Transmitters

USER MANUAL WIKI.COM

Collins Radio Group
Rockwell International
Broadcast Engineering
Dallas, Texas 75207

Printed in United States of America

If You Didn't Get This From My Site,
Then It Was Stolen From....
www.SteamPoweredRadio.com

www.SteamPoweredRadio.com

		Page
Section 1	General Description	1-1
1.1	Introduction	1-1
1.2	Physical Description	1-1
1.3	Functional Description	1-1
1.4	Technical Characteristics	1-1
1.4.1	Mechanical	1-1
1.4.2	Electrical	1-2
Section 2	Installation	2-1
2.1	Unpacking and Inspecting	2-1
2.1.1	Domestic Shipments	2-1
2.1.2	Foreign Shipments	2-1
2.2	Assembly	2-1
2.3	Primary Power	2-2
2.3.1	General	2-2
2.3.2	Transformer Connections	2-2
2.4	Transmitter Cooling	2-8
2.5	Initial Turn-on Procedure	2-8
2.6	Remote Operation	2-10
2.7	Frequency Change	2-10
Section 3	Operation	3-1
3.1	General	3-1
3.2	Controls and Indicators	3-1
3.2	Controls and Indicators	3-1
3.3	Turn-on Procedure	3-1
3.4	Shutdown Procedures	3-5
3.4.1	Normal Turnoff	3-5
3.4.2	Emergency Turnoff	3-5
3.5	Power Readings	3-5
3.6	Automatic Recycle Resetting	3-7
Section 4	Principles of Operation	4-1
4.1	General	4-1
4.2	Block Diagram Discussion	4-1
4.3	RF Circuits	4-1
4.3.1	Exciter	4-1
4.3.2	RF Driver	4-1
4.3.3	RF Power Amplifier	4-2
4.3.4	Low-Pass Filter A13	4-4

www.SteamPoweredRadio.com

		Page
4.3.5	Directional Coupler A16	4-4
4.4	Power Supplies and Power Control Circuits	4-4
4.4.1	General	4-4
4.4.2	28-Volt DC Power Supply PS1	4-4
4.4.3	PA Bias Power Supply PS2	4-5
4.4.4	PA Plate Power Supply	4-5
4.4.5	Power Control Unit A9	4-5
4.4.6	Power Control Regulator A8	4-5
4.4.7	PA Screen Power Supply	4-9
4.4.8	Driver Power Supply	4-9
4.4.9	Filament Voltage Regulator A5	4-9
4.4.10	Filament Voltage Distribution	4-10
4.5	Primary Power Distribution Control and Overload Circuits	4-10
4.5.1	Primary Power Distribution	4-10
4.5.2	Transmitter Turn-on	4-14
4.5.3	Exciter Power Control Override	4-14
4.5.4	VSWR Calibrate and Auto Power Control Unit A3	4-14
4.5.5	Tune and Power Control Relay Assembly	4-19
4.5.6	Overload Protection	4-19
4.5.7	Fault Tally and Automatic Recycle Panel A24	4-19
4.5.8	Remote Control Relays	4-20
Section 5	Maintenance	5-1
5.1	General	5-1
5.2	Cleaning	5-1
5.2.1	General Cleaning Procedures	5-1
5.2.2	Air Filter	5-1
5.2.3	Tube Cleaning	5-2
5.3	Inspection	5-2
5.4	Lubrication	5-2
5.5	Troubleshooting	5-2
5.5.1	Access Panel Interlock Switch	5-2
5.5.2	Test Equipment	5-2
5.6	Adjustments	5-2
5.6.1	Switch Adjustments	5-3
5.6.2	Filament Voltage Adjustment	5-4
5.6.3	Filament Voltmeter Adjustment	5-4
5.6.4	DC Overload Adjustment	5-5
5.6.5	PA Grid Current and Driver Screen Current Meter Calibration	5-6
5.6.6	High-Voltage Power Supply Adjustments	5-6
5.6.7	RF Tuning Procedure	5-7
5.6.8	Board A3, Offset Zero Adjustment	5-15
5.6.9	Automatic Power Control Adjustment	5-15

www.SteamPoweredRadio.com

		Page
5.6.10	VSWR Trip	5-16
5.7	Parts Replacement	5-17
5.7.1	4CX15000A PA Tube	5-17
5.7.2	Control Panel Indicator Lamps	5-17
5.7.3	Fuses	5-17
5.7.4	Replacement Parts	5-18
Section 6	Parts List	6-1
6.1	General	6-1
6.2	Symbol	6-1
6.3	Description	6-1
6.4	Manufacturers Part Number	6-1
6.5	Mfr Code	6-1
6.6	Collins Part Number	6-1
6.7	Illustrations	6-1
6.8	List of Equipment	6-2
6.9	Manufacturers Code and Index	6-2
Section 7	Illustrations	7-1

list of illustrations

Figure		Page
1-1	831G-2 20-kW/831G-2B 22.5-kW FM Transmitter	1-0
2-1	831G-2 20-kW FM Transmitter, Outline and Installation Drawing	2-3
2-2	831G-2B 22.5-kW FM Transmitter, Outline and Installation Drawing	2-5
3-1	831G-2 20-kW/831G-2B 22.5-kW FM Transmitter, Controls and Indicators	3-2
4-1	831G-2 20-kW/831G-2B 22.5-kW FM Transmitter, Block Diagram	4-2
4-2	Plate Cavity	4-3
4-3	831G-2 20-kW/831G-2B 22.5-kW FM Transmitter, Schematic Diagram, Output Network	4-4
4-4	Power Control Circuits, Schematic Diagram	4-7
4-5	Filament Regulator Output Waveshapes	4-10

www.SteamPoweredRadio.com

Figure		Page
4-6	Filament Voltage Distribution	4-11
4-7	Primary Power Distribution	4-13
4-8	Power ON-OFF Control Circuits	4-15
4-9	Fault Tally and Automatic Recycle Panel, Simplified Schematic	4-17
4-10	Latching Relays A12, Simplified Schematic	4-22
4-11	Remote Control Strapping, Latching Relay Board (A12)	4-23
4-12	Power Control Relays A2A3, Simplified Schematic	4-23
4-13	Typical Remote Interconnections to Remote Control Terminal Board TB4	4-24
5-1	PA Plate Cavity Shorting Plane Approximate Adjustment	5-8
5-2	Graph for Approximate Setting of Driver Tuning, and Driver Grid Sliders	5-9
5-3	PA Neutralizing Adjustment	5-9
5-4	831G-2/831G-2B Amplifier Efficiency Vs Frequency Graph	5-13
5-5	Power to VSWR Conversion Graph	5-16
6-1	831G-2 20-kW/831G-2B 22.5-kW FM Transmitter	6-7
6-2	Control Panel, A1	6-13
6-3	Remote Control Assembly, A2	6-17
6-4	IC Board, A3	6-19
6-5	Filament Regulator, A5	6-22
6-6	Circuit Breaker Panel, A6	6-24
6-7	Tuning/Power Control Relay Board, A7	6-26
6-8	Power Control Regulator, A8	6-28
6-9	Power Control Panel, A9	6-30
6-10	2-kV Power Supply, A10	6-32
6-11	RF Driver Assembly, A11	6-34
6-12	Remote Control Latching Relay Board, A12	6-38
6-13	RF Output Low-Pass Filter, A13	6-40
6-14	Power Supply Filter, A14	6-42
6-15	Metering Multiplier Board, A15	6-46
6-16	Directional Coupler, A16	6-48
6-17	Bleeder Resistor Panel, A17	6-50
6-18	Power Amplifier Cavity, A18	6-52
6-19	Input Terminal Panel, A19	6-58
6-20	Card Cage Assembly, A20	6-60
6-21	Power Amplifier Socket, A21	6-62
6-22	Overload and Meter Calibrate Panel, A22	6-64
6-23	Fault Tally and Automatic Recycle Panel, A24	6-67
6-24	Fault Tally Card, A24A1	6-69
6-25	Auto Recycle Card, A24A2	6-71
6-26	28-Volt Power Supply, PS1	6-73
6-27	PA Bias Power Supply, PS2	6-75

www.SteamPoweredRadio.com

Table		Page
2-1	Transformer Connections	2-7
3-1	Left Cabinet	3-1
3-2	Center Cabinet	3-2
3-3	Right Cabinet	3-4
3-4	Typical Indications, 20-Kilowatt and 22.5-Kilowatt Power Output	3-4
3-5	Nominal Readings, Reduced Power Operation	3-6
5-1	Required Test Equipment	5-3

www.SteamPoweredRadio.com

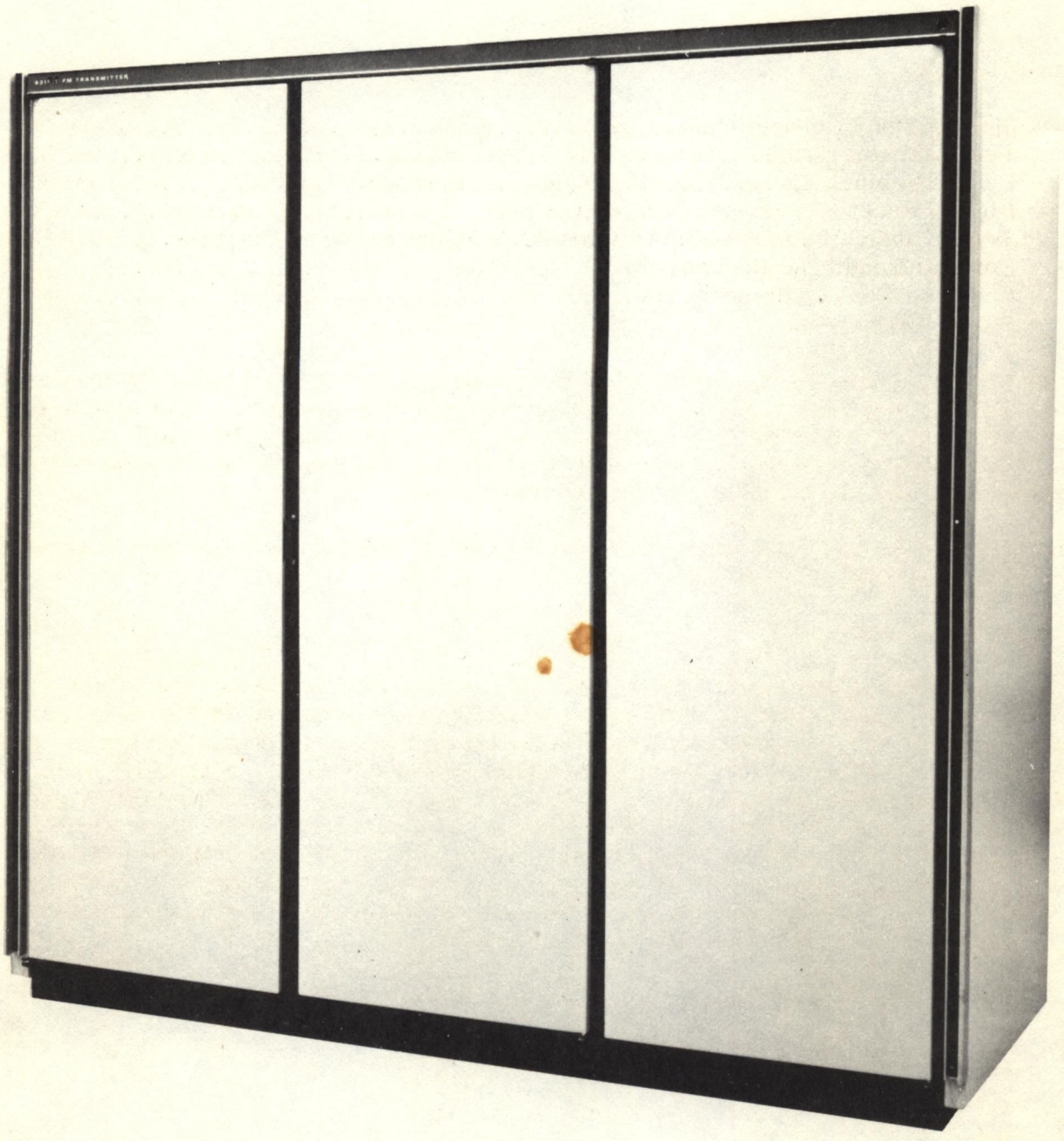

B528 023 Pb

Figure 1-1. 831G-2 20-kW/831G-2B 22.5-kW FM Transmitter.

www.SteamPoweredRadio.com

1.1 Introduction

When equipped with an optional stereo generator and SCA generator, the 831G-2 20-kW or 831G-2B 22.5-kW FM Transmitter provides continuous monaural, sterophonic, and SCA (subsidiary communication authorization) frequency-modulated service. The transmitter operates in the fm broadcast range (88 to 108 MHz) at a maximum output of 20,000 watts (831G-2) or 22,500 watts (831G-2B). Reduced maximum power is available by tap changes on the plate and screen transformers.

1.2 Physical Description

The transmitter is housed in a basic unistrut cabinet that contains all transmitter components. (Refer to figure 1-1.) The transmitter contains three sections. The section on the left in figure 1-1 contains the power amplifier and driver circuits. The center section houses the control panel, exciter, and control circuits. The section on the right contains the power supplies, the circuit breaker, and fuse panel.

Mechanical and electrical interlocks are provided on all front access panels, power amplifier plate cavity door, and grid tuning door.

1.3 Functional Description

The transmitter consists of an exciter, a driver, and power amplifier. The output of the exciter is applied to the driver. The driver stage consists of two 4CX250B tubes operated class C. The input to the driver is amplified to approximately 400 watts and applied to the power amplifier that contains one 4CX15000A tube operated class C. The input to the power amplifier is amplified and applied to a 50-ohm unbalanced load. Power control circuits monitor the rf output power level. When a change in output power is detected, these circuits change the plate voltage to compensate. Other control circuits within the transmitter monitor reflected power, forward power, operating voltage, and air pressure within the driver and power amplifier section. They protect the transmitter by removing power when excessive currents or loss of air pressure occurs.

1.4 Technical Characteristics

1.4.1 Mechanical

Weight:
1088.6 kg (2400 pounds)

Size:
Height
1752.6 mm (69 inches)
Width
1816.1 mm (71-1/2 inches)

If You Didn't Get This From My Site,
Then It Was Stolen From....
www.SteamPoweredRadio.com

Depth
698.5 mm (27-1/2 inches)

Ventilation (2 Sources):
Squirrel-cage type blower mounted under the cavity
Axial fan that provides positive air pressure within the entire cabinet of the 831G-2, or negative air pressure within the 831G-2B cabinet.

Ambient Temperature Range:
+15° to +45°C (59° to 113°F) operating

Relative Humidity Range:
0 to 90% relative humidity

Altitude:
Up to 7500 feet (2285 m) at 40°C (104°F)

Shock and Vibration:
Normal handling and transportation

Finish:
Cabinet Exterior
Collins gray baked enamel
Control Panel
White baked enamel

1.4.2 Electrical

Frequency Range:
88 to 108 MHz

Maximum Power Output:
20,000 watts into a 50-ohm unbalanced line (831G-2)
22,500 watts into a 50-ohm unbalanced line (831G-2B)

Standing Wave Ratio:
Not to exceed 2:1

Power Source:
200 to 250 volts, 60 Hz, 3-phase
Available voltage taps on transformer: 200, 210, 220, 230, 240, and 250
50-Hz operation available on special order

Power Line Variations:
±5% overall power line variations; in addition, the phase angle and voltage unbalance shall be within 5% of the average of all three phases

Harmonic and Spurious Radiation:
Any emission appearing on a frequency removed from the carrier by between 120 kHz and 240 kHz inclusive is attenuated at least 25 dB below the level of the unmodulated carrier.
Any emission appearing on a frequency removed from the carrier by more than 240 kHz and up to and including 600 kHz is attenuated at least 35 dB below the level of the unmodulated carrier.

www.SteamPoweredRadio.com

Any emission appearing on a frequency removed from the carrier by more than 600 kHz is attenuated at least 80 dB below the level of the unmodulated carrier.

Modulation Characteristics:
Wideband direct fm; standard audio preemphasis is incorporated

Input Power Requirements:
35 kVA at 0.97 power factor for 20-kW output (831G-2)
39 kVA at 0.97 power factor for 22.5-kW output (831G-2B)

Excitation Source:
Collins 310Z-2 exciter capable of accepting an input signal of from 30 Hz to 75 kHz

Options:
Stereo
Add Collins 786V-1 Stereo Generator to exciter
Stereo and SCA
Add Collins 786V-1 and 786W-1 SCA Generator to exciter
Remote Control
Add Collins latching relay A12, power control relays A2A3, and remote relays A2A1

Output Impedance:
50 ohms, unbalanced

Carrier Frequency Stability:
Frequency will not vary more than ±500 Hz for an ambient temperature range of +15 to +45°C (59° to 113° F) and a line variation of ±5%

Audio Input Impedance:
600 ohms, balanced

Audio Input Level:
+10 dBm ±2 dB

Audio Frequency Response:
Complies with FCC standard 75-microsecond preemphasis curve

Audio Frequency Distortion:
Stereo
Not more than 0.5%, 50 Hz to 15 kHz
Monaural
Not more than 0.25%, 50 Hz to 15 kHz

FM Noise Level:
65 dB below 100% modulation (±75 kHz)

AM Noise Level:
55 dB below equivalent 100% am modulation

www.SteamPoweredRadio.com

2.1 Unpacking and Inspecting

2.1.1 Domestic Shipments

a. The uncrated transmitter is shipped mounted on a shipping skid. Inspect for loose screws and fasteners. Ensure that all controls operate freely. Examine the cabinet for dents or scratches. Ensure that cable and wiring connections are tight and situated clear of each other and the chassis.

b. File any damage claims properly with the transportation company. Retain all packing material if a claim is filed.

2.1.2 Foreign Shipments

a. The tranamitter is shipped in a skid-type crate with unpacking instructions stenciled on the side. Uncrate the transmitter carefully to avoid damage. Inspect for loose screws and fasteners. Ensure that all controls operate freely. Examine the cabinet for dents or scratches. Ensure that cable and wiring connections are tight and situated clear of each other and the chassis.

b. File any damage claims properly with the transportation company. Retain all packing material if a claim is filed.

2.2 Assembly

a. Plan the placement of the transmitter and its external wiring carefully before beginning installation. (Refer to figure 2-1 or 2-2, and paragraph 2-4.) Four knockout holes are located on the top of the transmitter section that contains the fuse panel. The holes accommodate cabling for 3-phase input voltage, audio input signal, and the remote control unit.

b. If optional modulation and frequency monitoring equipment is used, remove the center rear panel before positioning the transmitter. Determine the length of cable needed to connect the transmitter sample output to the monitoring equipment. Once the length is determined, connect the cable to the monitor jacks, and run the cable out of the transmitter through a previously unused knockout hole.

c. If the 310Z-2 exciter was not factory installed, mount it in the area provided in the transmitter center section. Connect an rf cable from the exciter output to the driver input. Attach the override voltage lead from A4TB1-16 to A19E6. Connect the 117-volt ac power cable from the exciter to connector J3 (figure 2-1 or 2-2). Refer to the 310Z-2 exciter instruction book for installation of audio input cables. Replace the rear cover and place the transmitter in its permanent location.

d. Connect primary power according to instructions supplied in paragraph 2.3.1.

www.SteamPoweredRadio.com

e. Transformers T1 and T2, filters L1 and L2, and filter capacitor C3 may have been removed to facilitate shipping. Install these components if they were shipped separately.

f. Check the transformer taps for proper connection. Refer to paragraph 2.3.2 and table 2.1.

g. If output tube 4CX15000A was removed for shipping, install it using the procedure outlined in paragraph 5.7.1.

h. If a remote control panel is used, run the external wiring from the remote unit into the transmitter and connect it to TB4 (figure 2-1 or 2-2). Also install the appropriate optional remote control relay cards, A12, A2A3, and A2A1.

i. Connect the customer-supplied 50-ohm transmission line to the rf output connector mounted on top of the transmitter cabinet.

CAUTION

Damage will result from an improper impedance match between the transmitter and and the transmission line. Ensure that the transmission line and antenna present a 50-ohm impedance and a vswr not greater than 2:1 to the transmitter at the operating frequency.

2.3 Primary Power

2.3.1 General

The transmitter requires a 200- to 250-volt ±5%, 3-phase, 60-Hz ac power source that delivers 35 kilovolt-amperes at a 0.97 power factor for the 831G-2 or 39 kilovolt-amperes at a 0.97 power factor for the 831G-2B. Make provisions for a fused main power disconnect switch or circuit breaker to A19TB3 in the transmitter.

2.3.2 Transformer Connections

The broad range of allowable voltage sources (200 to 250 volts) is made possible by the availability of different tap connections on power transformers T1, T2, T3, and T4 and power supply transformers PS1T1 and PS2T1.

Six connections are made on each of the transformers T1, T2, and T3. Three of these connections (at pins 1, 10, and 19 on T1, T2, and T3) are made regardless of the source voltage. The wires at these connections are labeled with their connecting pin number. The other three connections are made to correspond with the power source voltage. The wires at these connections are labeled A, B, or C on transformers T1 and T2, and AA, BB, or CC on transformer T3. The initial connection of these wires to their respective transformers are made according to the instructions supplied in table 2-1.

www.SteamPoweredRadio.com

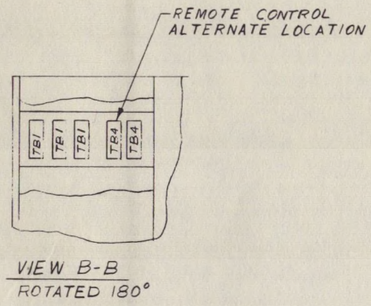

VIEW B-B
ROTATED 180°

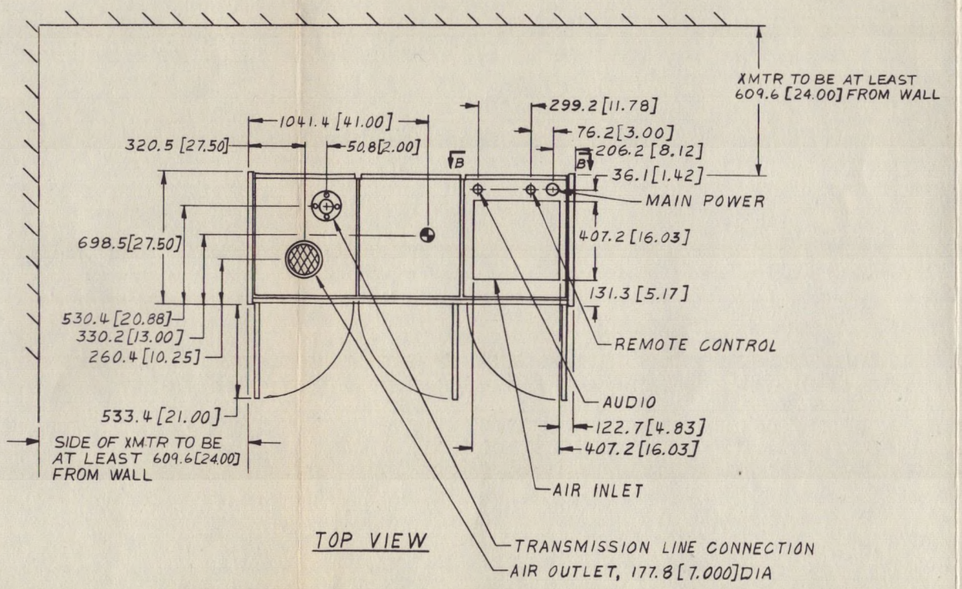

TOP VIEW

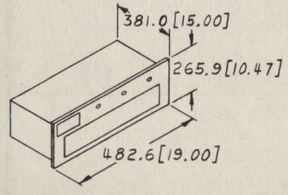

310Z-2 EXCITER
NORMALLY INSTALLED IN TRANSMITTER
MAY BE INSTALLED IN EQUIPMENT RACK
OR CONSOLE

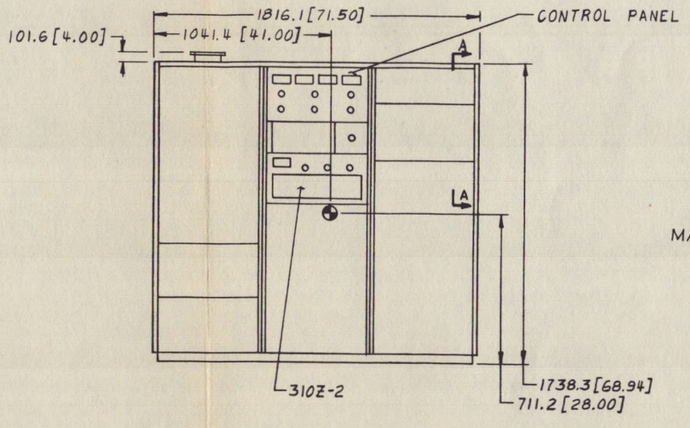

FRONT VIEW

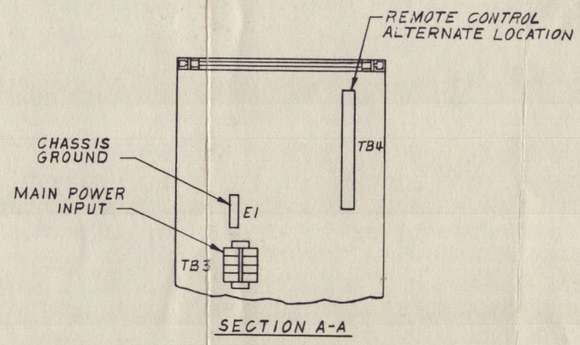

SECTION A-A

-001

USER MANUAL WIKI.COM

If You Didn't Get This From My Site,
Then It Was Stolen From....
www.SteamPoweredRadio.com

Figure 2-1. 831G-2 20-kW FM Transmitter, Outline and Installation Drawing.

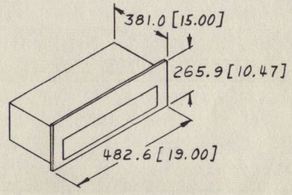

310Z-2 EXCITER
NORMALLY INSTALLED IN TRANSMITTER
MAY BE INSTALLED IN EQUIPMENT RACK
OR CONSOLE

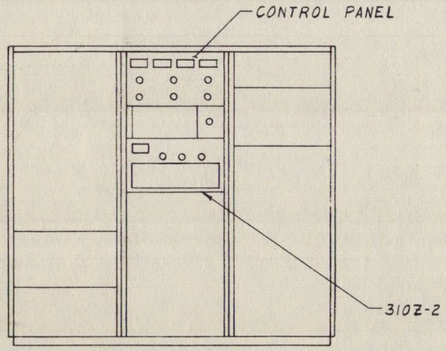

FRONT VIEW

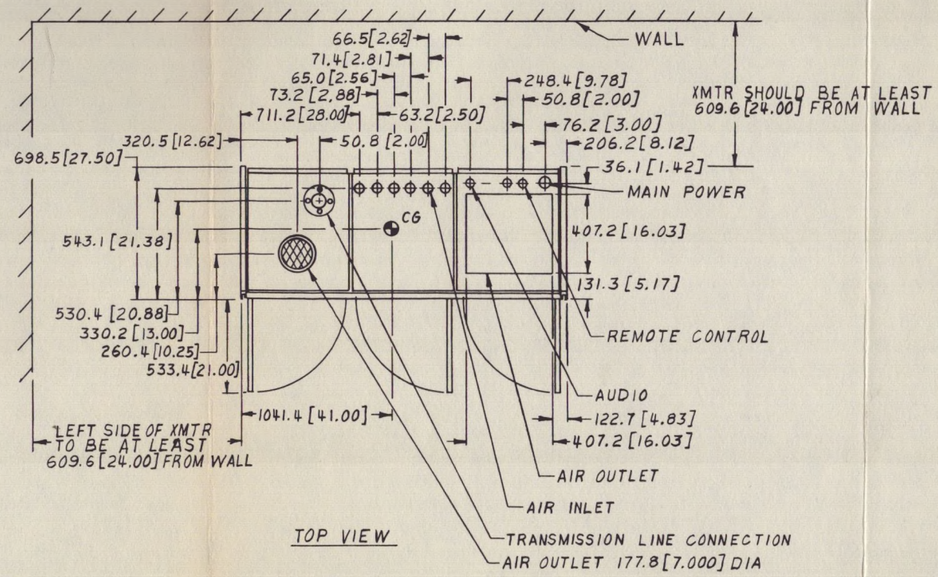

TOP VIEW

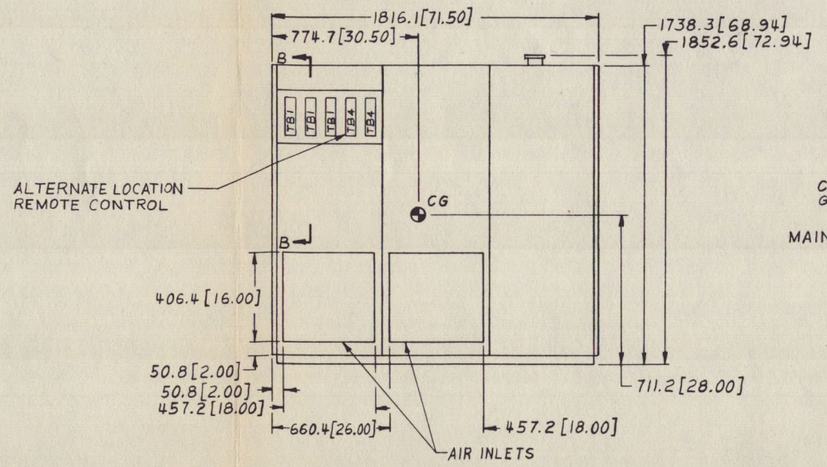

-001

BACK VIEW

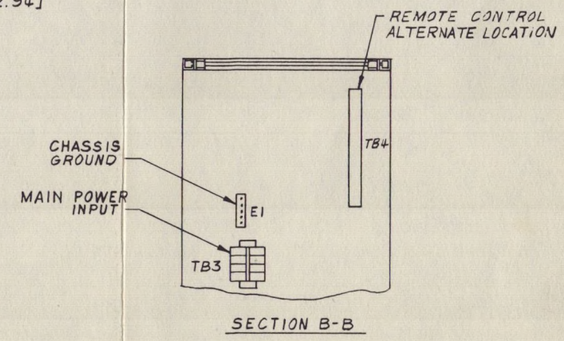

SECTION B-B

USER MANUAL WIKI.COM

If You Didn't Get This From My Site,
Then It Was Stolen From....
www.SteamPoweredRadio.com

Figure 2-2. 831G-2B 22.5-kW FM Transmitter, Outline and Installation Drawing.

www.SteamPoweredRadio.com

Table 2-1. Transformer Connections.

LINE VOLTAGE	T1, T2		T3		T4		PS1T1		PS2T1	
	WIRE LABEL	TERM CONN	WIRE LABEL	TERM CONN	WIRE LABEL	TERM CONN	WIRE LABEL	TERM CONN	WIRE LABEL	TERM CONN
200 volts, 3-phase	A B C	13 22 4	AA BB CC	13 22 4	A	2	A B C	2 5 8	A	2
210 volts, 3-phase	A B C	14 23 5	AA BB CC	14 23 5	A	3	A B C	2 5 8	A	2
220 volts, 3-phase	A B C	15 24 6	AA BB CC	15 24 6	A	4	A B C	2 5 8	A	2
230 volts, 3-phase	A B C	16 25 7	AA BB CC	16 25 7	A	5	A B C	3 6 9	A	3
240 volts, 3-phase	A B C	17 26 8	AA BB CC	17 26 8	A	6	A B C	3 6 9	A	3
250 volts, 3-phase	A B C	18 27 9	AA BB CC	18 27 9	A	7	A B C	3 6 9	A	3

#1 Xmitter HL

NOTE

The initial connections on transformers T1 and T2 may be changed after tuning to reduce am noise and to provide more accurate meter readings. (See paragraph 5.6.7.6) T1 connections are selected to provide a power output approximately 10 percent above the authorized station rating. T3 connections are selected to give 1800 to 2000 volts of driver voltage at the authorized station output.

Two connections are made at transformer T4. One connection is made at pin 1 regardless of the source voltage and the wire at this pin is labeled with its connecting pin number (1). The second wire (A) is connected to correspond with the power source voltage. Wire A is connected according to instructions supplied in table 2-1.

Six connections are made on power supply transformer PS1T1. Three of these connections (at pins 1, 4, and 7) are made regardless of the source voltage. The wires at these connections are labeled with their connecting pin number. The other three connections are made to correspond with the power source voltage. The wires at these connections are labeled A, B, or C. These wires are connected according to instructions supplied in table 2-1.

Two connections are made at power supply transformer PS2T1. One connection is made at pin 1 regardless of the source voltage and the wire at this pin is labeled with its connecting pin number (1). The second wire (A) is connected to correspond with the power source voltage. Wire A is connected according to instructions supplied in table 2-1.

2.4 Transmitter Cooling

Adequate cooling of the transmitter is imperative to reduce downtime, to extend component reliability, and to provide longer tube life. An adequate supply of cool ambient air (temperature must not exceed +45 C) is required. Consult a qualified air-conditioning engineer for recommendations on ducting and cooling requirements. When designing the cooling system, observe the following rules:

a. If the exhaust air is ducted away from the transmitter, the duct work must not create any back pressure on the transmitter exhaust system. Use a fan or blower to compensate for duct losses when the exhaust is ducted outdoors or when back pressure is present (1200-ft^3/min capacity for the 831G-2 and 1600-ft^3/min capacity for the 831G-2B).

b. If intake air is ducted in from the roof, raise the intake sufficiently high above the surface to prevent intake of air heated by sun reflection from the roof.

c. If both intake and exhaust ducts are used, locate the duct openings in a common area of the building to equalize wind pressure effects. However, do not allow the exhaust to recirculate into the intake causing heat build-up.

2.5 Initial Turn-on Procedure

a. Ensure that the transmitter has been properly assembled and connected according to instructions provided in paragraphs 2-2 through 2-4.

b. Open access panels to the control circuit cards and exciter circuit cards. Check the circuit cards for proper installation.

c. Replace all access panels and ensure that all doors and panels are properly closed.

www.SteamPoweredRadio.com

d. Ensure that all transmitter circuit breakers are OFF.

e. Apply primary power to transmitter.

f. Set the 28 VDC POWER SUPPLY circuit breaker to ON.

g. Set the BLOWERS circuit breaker to ON and press the FILAMENT ON pushbutton. The power amplifier blower will start.

WARNING

Deadly voltages are exposed when side cover is removed. Use extreme caution to *prevent operator injury.*

h. Loosen the two retaining bolts at the bottom of the left cabinet side panel. Grip the panel securely and lift it from place. Check the rotation of the blower. Rotation should be counterclockwise when viewed from the left side. If rotation is in the wrong direction, turn off primary power and interchange any two primary power input leads at A19TB3. Replace the side panel, reapply primary power, and press the FILAMENT ON pushbutton.

i. Check the cabinet fan rotation by lifting the foam filter from the top right side of the cabinet. Rotation should be counterclockwise on the 831G-2 and clockwise in the 831G-2B, when viewed from the top. If the rotation is in the wrong direction, turn off the primary power and reverse any two leads of the fan motor. Replace the filter, reapply primary power, and press the FILAMENT ON pushbutton.

CAUTION

Do not perform the remainder of this procedure if the transmitter is not connected to an antenna with a 50-ohm impedance or a dummy load capable of dissipating at least 25 kW.

j. Set all circuit breakers to ON.

k. Set the test meter selector switch to 28V SUPPLY 40V. The test meter will indicate 28 ±2.0 volts dc.

l. Set the test meter selector switch to PA FIL 8V. The test meter will indicate 5.8 -0, +0.2 volts. Refer to paragraphs 5.6.2 and 5.6.3 if meter indication is out of tolerance.

m. Ascertain that the exciter POWER switch is ON.

NOTE

The transmitter is adjusted and pretuned at the factory for specific customer power output and frequency requirements. In normal applications, the fine-tuning and adjustment procedures provided in steps n. through u. are adequate to ensure proper transmitter operation. However, if the transmitter is to be operated at a frequency or power output different from the frequency or power output designated in the production test data supplied with the transmitter, perform the complete rf tuning and power adjustment procedures listed in paragraph 5.6.7.

www.SteamPoweredRadio.com

n. Set the POWER CONTROL switch to MANUAL.

o. Set the POWER switch to FORWARD.

p. Set the TRANSMITTER CONTROL switch to LOCAL.

q. Press the PLATE ON switch. The PLATE ON switch will light.

r. Slightly adjust the PA LOADING and PA TUNING controls until maximum power output is displayed on the RF WATTMETER.

s. RAISE or LOWER the POWER ADJUST control until the RF WATTMETER displays the station's authorized power level.

t. Compare meter readings with those listed in table 3-4 or 3-5. If additional tuning is required, refer to the adjustment procedures listed in section 5.

u. Set POWER CONTROL switch to AUTOMATIC.

2.6 Remote Operation

To initiate remote operation, set the TRANSMITTER CONTROL switch to REMOTE. When operating with the control panel, this switch must be in the LOCAL position.

2.7 Frequency Change

The transmitter operating frequency is changed by replacing the crystal in the exciter and performing the rf tuning procedure in paragraph 5.6.7. (See the 310Z-2 exciter instruction book.)

www.SteamPoweredRadio.com

3.1 GENERAL

The transmitter is operated from the control panel. Once the transmitter has been installed and properly tuned, it is only necessary to monitor meter indications and to make minor tuning and loading adjustments (figure 3-1). See the 310Z-2 exciter instruction book for 310Z-2 operation.

3.2 Controls and Indicators

Refer to the following tables for a general description of the operating controls found on the front panels of the transmitter cabinets: table 3-1, left cabinet; table 3-2, center cabinet; and table 3-3, right cabinet.

3.3 Turn-on Procedure

a. Ensure that steps a. through m. in paragraph 2.5 have been performed.

b. Observe the control panel meters after plate voltage is applied and ensure that the transmitter readings agree with those in table 3-4 or table 3-5.

c. If minor tuning is required, perform steps n. through u. of paragraph 2.5.

Table 3-1. Left Cabinet

REF DESIG	CONTROLS AND INDICATORS	FUNCTION
C37	DRIVER PLATE TUNING	A variable capacitor that adjusts driver tuning.
A24DS1	PA SCREEN	Screen fault indicator.
A24DS2	PA PLATE	Plate fault indicator.
A24DS3	VSWR	Vswr fault indicator.
A24DS4	DRIVER	Driver plate fault indicator.
A24S1	AUTO RECYCLE	Automatic recycle ON/OFF.

www.SteamPoweredRadio.com

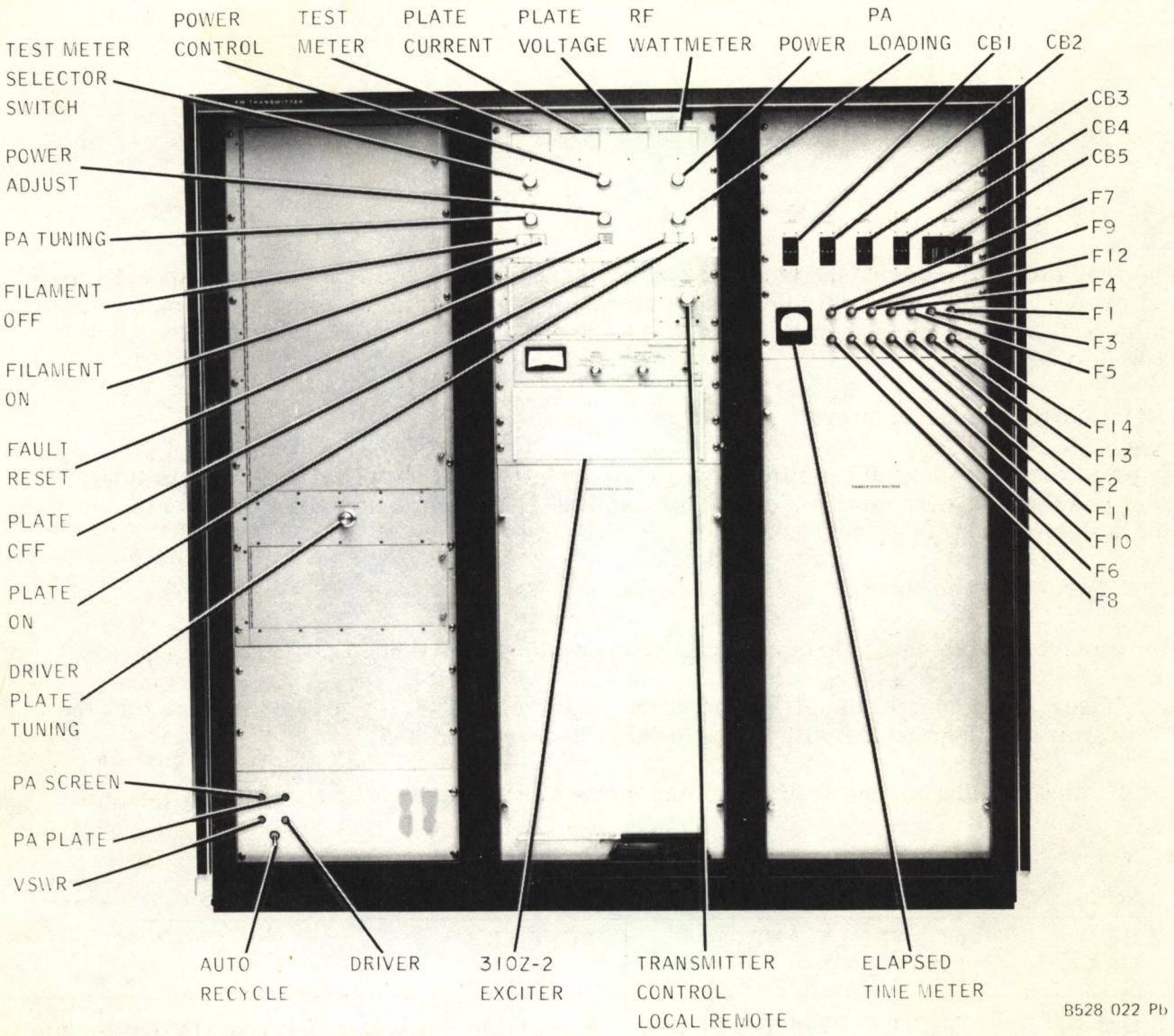

Figure 3-1. 831G-2 20-KW/831G-2B 22.5-kW FM Transmitter, Controls and Indicators.

Table 3-2. Center Cabinet.

REF DESIG	CONTROLS AND INDICATORS	FUNCTION
A1M1	TEST METER	Displays 12 internal operational voltage or current readings.
A1S1	Test meter selector	Rotary switch that selects one of 12 readings to display on the test meter. The value below each switch position is the full-scale reading for that position.

www.SteamPoweredRadio.com

Table 3-2. Center Cabinet. (Cont)

REF DESIG	CONTROLS AND INDICATORS	FUNCTION
A1M2	PLATE CURRENT	Displays power amplifier plate current.
A1M3	PLATE VOLTAGE	Displays power amplifier plate voltage.
A1M4	RF WATTMETER	Displays transmitter forward and reflected power.
A1S2	POWER FORWARD/REFLECTED	2-position switch that selects forward or reflected power for display on the RF WATTMETER.
A1S5	POWER CONTROL AUTOMATIC/MANUAL	2-position switch that selects automatic or manual power control.
A1S6	POWER ADJUST LOWER/RAISE	Spring-loaded momentary switch that lowers or raises power when POWER CONTROL switch S5 is in MANUAL.
A1S3	PA TUNING RAISE/LOWER	Spring-loaded momentary switch that positions tuning capacitor C50.
A1S4	PA LOADING RAISE/LOWER	Spring-loaded momentary switch that positions loading capacitor C51.
A1S7	PLATE OFF	Pushbutton momentary indicator switch that removes all operating voltage from the transmitter.
A1S8	PLATE ON	Pushbutton momentary indicator switch that applies operating voltage to the transmitter.
A1S9	FILAMENT OFF	Pushbutton momentary indicator switch that removes filament voltage from the transmitter.
A1S10	FILAMENT ON	Pushbutton momentary indicator switch that applies filament voltage to the transmitter.
A1S11	FAULT RESET	Pushbutton momentary switch that resets the fault indicators.
S10	TRANSMITTER CONTROL LOCAL/REMOTE	2-position switch that selects local or remote operation.

www.SteamPoweredRadio.com

Table 3-3. Right Cabinet.

REF DESIG	CONTROLS AND INDICATORS	FUNCTION
A6CB1	28 VDC POWER SUPPLY	1 ampere magnetic circuit breaker that protects the 28-V dc power supply.
A6CB2	BLOWERS	10-ampere magnetic circuit breaker that protects both blowers.
A6CB3	DRIVER POWER SUPPLY	4.5-ampere magnetic circuit breaker that protects the driver power supply.
A6CB4	PA SCREEN POWER SUPPLY	15-ampere magnetic circuit breaker that protects the pa screen power supply.
A6CB5	PA PLATE POWER SUPPLY	100-ampere magnetic circuit breaker with a series trip feature that allows the circuit breaker to be tripped from a remote location.
A6F7/F9 F12	FAN	2-ampere fuse.
A6F6/F8 F10	CONTROLLER	1-ampere fuse.
A6F4/F5	PA BIAS POWER SUPPLY	0.25-ampere fuse.
A6F1/F3	FILAMENTS	8-ampere fuse.
A6F2/F11	EXCITER	3-ampere fuse.
A6F13/ F14	DRIVER FILAMENT	2-ampere fuse.

Table 3-4. Typical Indications, 20-Kilowatt and 22.5-Kilowatt Power Output.

TYPICAL METER READINGS		
	831G-2	831G-2B
Power output	20.0 kilowatts	22.5 kilowatts
Pa plate volts	7600 to 7900 volts	7800 to 8000 volts
Pa plate current	3.40 to 3.65 amperes	3.5 to 4.1 amperes
Pa screen current	350 to 500 mA	380 to 570 mA
Pa grid current	50 to 65 mA	120 to 180 mA
Left dvr. cath. 1	180 to 200 mA	180 to 200 mA
Right dvr. cath. 1	180 to 200 mA	180 to 200 mA

www.SteamPoweredRadio.com

Table 3-4. Typical Indications, 20-Kilowatt and 22.5-Kilowatt Power Output. (Cont)

TYPICAL METER READINGS		
	831G-2	831G-2B
Dvr. screen 1	5 to 30 mA	5 to 60 mA
Dvr. grid 1	5 to 10 mA	5 to 10 mA
Dvr. plate volts	1800 to 2000 volts	1800 to 2000 volts
Dvr. screen volts	290 to 310 volts	290 to 310 volts
310Z-2 Output Power	5 to 10 watts	5 to 10 watts
Pa plate efficiency	70 to 76%	70 to 74%
Control V	26 to 28 volts	26 to 28 volts

3.4 Shutdown Procedures

3.4.1 Normal Turnoff

a. Press the PLATE OFF pushbutton and allow a few seconds for the voltage to decrease.

b. Press the FILAMENT OFF pushbutton.

c. Set PA PLATE POWER SUPPLY circuit breaker CB5 OFF.

d. Set 28 VDC POWER SUPPLY circuit breaker CB1 OFF.

e. Open the primary disconnect switch.

3.4.2 Emergency Turnoff

In the event of an emergency, remove power in any of the following ways: press the FILAMENT OFF pushbutton, turn 28 VDC POWER SUPPLY circuit breaker CB1 OFF, or open the primary disconnect switch.

3.5 Power Readings

The transmitter control panel RF WATTMETER indicates forward and reverse power. It does not indicate true power. To obtain true power using the wattmeter, subtract reverse power from forward power.

www.SteamPoweredRadio.com

www.SteamPoweredRadio.com

Table 3-5. Nominal Readings, Reduced Power Operation.

POWER OUTPUT	PLATE VOLTAGE		PLATE CURRENT		SCREEN VOLTAGE		SCREEN CURRENT		CONTROL GRID CURRENT		EFFICIENCY (%)	
	Recorded	Nominal	Recorded	Nominal	Recorded	Nominal	Recorded	Nominal	Recorded	Nominal	Recorded	Nominal
18,000		7450		3.3		690		400		50		73.0
16,000		7200		3.0		670		380		50		73.5
14,000		6950		2.7		640		370		50		74.0
12,000		6750		2.4		610		350		50		73.5
10,000		6500		2.1		580		330		50		73.0

Note: The above are approximations. The individual transmitters will vary with source voltage and installation.

3.6 Automatic Recycle Resetting

Automatic transmitter shutdown occurs when pa screen, pa plate, driver, or vswr is overloaded. An overload indicator (A24DS1 through A24DS4) lights on fault tally and automatic recycle panel A24. If the overload was of short duration, the automatic recycling circuits restart the transmitter. The indicator light remains on until the transmitter operator presses the FAULT RESET switch on the main control panel. Perform maintenance procedures if the automatic recycling circuits fail to restart the transmitter.

The fault recycling circuits may be disabled for tuning or maintenance by switching the AUTO RECYCLE switch to OFF.

www.SteamPoweredRadio.com

4.1 General

The 831G-2 20-kW and 831G-2B 22.5-kW FM Transmitters operate in the 88- to 108-MHz range at a maximum output of 20,000 (831G-2) or 22,500 (831G-2B) watts. A Collins 310Z-2 solid-state fm wideband exciter, with provision for optional stereo and/or SCA operation, provides excitation. The transmitter is equipped with monitoring circuits that check and correct changes in power output and overload conditions. A control panel, which may be mounted up to 250 feet from the transmitter cabinet, provides complete transmitter metering and tuning controls. Refer to the overall schematic diagrams in Section 7 for detailed circuit information.

4.2 Block Diagram Discussion

Refer to figure 4-1. A 10-dBm input signal (monaural, stereo, or SCA) modulates the exciter. The output of the exciter is 10 to 20 watts, which is applied to the driver stage. The output of the driver is applied to the power amplifier. The power amplifier output is applied via a low-pass filter and directional coupler to a 50-ohm antenna.

A small portion of the forward power in the coupler is sent to the auto power control circuit for monitoring. If a change in output power is detected, a signal is sent to the power control unit that increases or decreases the plate and screen power supply input voltage to compensate. A sample of the reflected power is also sent to the power control circuits for monitoring. If an excessive amount of reflected power is detected, the control circuits remove plate voltage from the power amplifier. The 28-volt power supply provides power for the control circuits.

4.3 RF Circuits

4.3.1 Exciter

Refer to the 310Z-2 exciter section of this book for principles of operation.

4.3.2 RF Driver

The exciter output is applied to the driver stage that consists of two 4CX250B triodes in parallel (A11V1 and A11V2). The stage operates class C with adjustable cathode bias provided by R40 and R44 and grid leak bias by R50. The driver grid swamping resistor, R57, provides wide bandwidth and minimized plate-to-grid feedback.

The input circuit is a tuned transmission line with resistance loading. Capacitor C_N is a short piece of wire with a paddle on the end physically placed in parallel with the anodes of V1 and V2. The location of the paddle provides sufficient capacitance to neutralize the stage. A sample of the screen current flows through a transformer winding connected across pins 9 and 12 inside Hall-effect probe A22Z5 for screen current monitoring. Using the principle of the Hall effect, the stationary magnetic field around the transformer produces a current

www.SteamPoweredRadio.com

 My Apologies For This Page. It Slipped By Me When Proofing The Original Scans.

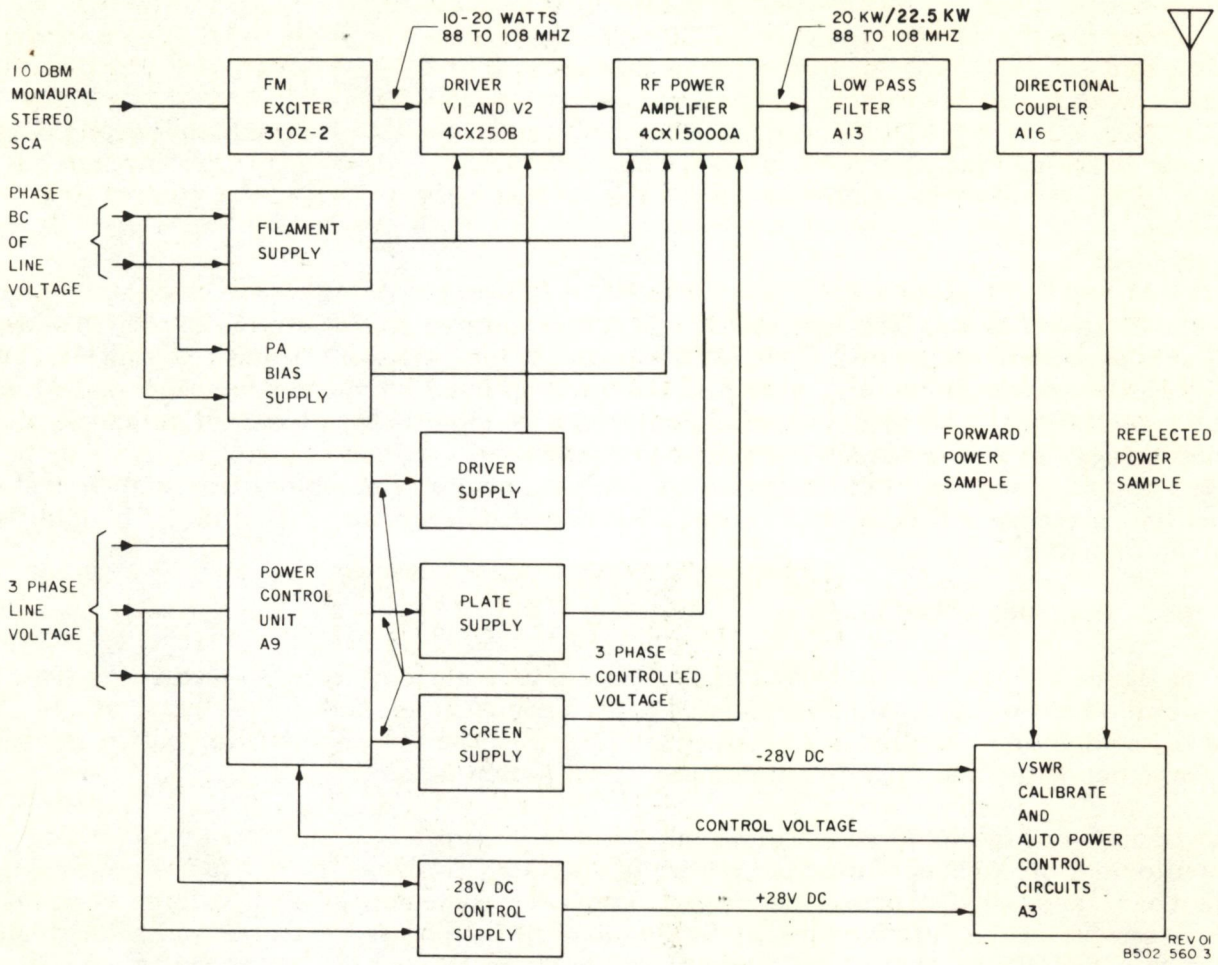

Figure 4-1. 831G-2 20-kW/831G-2B 22.5 kW FM Transmitter, Block Diagram.

through the control panel meter connected across pins 3 and 4 of A22Z5. A control current that is adjusted to calibrate the control panel meter flows through pins 1 and 2.

4.3.3 RF Power Amplifier

The driver output is coupled to the grid of the power amplifier tube A18V3. A tuned circuit composed of A21L7 and A11C37 provides impedance matching. Loading of the driver amplifier is accomplished by adjusting A21L7 (tuning) and A21L8 (loading). Inductor A21L8 is used to cancel a portion of the input capacity. Capacitor A21C36, in series with A18R75, is connected behind the pa plate tuning capacitor, A18C51. Inductor A18L14 and the distributed capacity of A18R75 are strapped to the cavity wall, forming a suppressor that dampens the higher order cavity resonances that can occur near the third harmonic of the output frequency. Cathode tuning (or peaking) capacitor A21C39 improves the bypass action at the operating frequency. Resistors A21R76 and A21R77 broaden the frequency response and minimize synchronous amplitude modulation products. Inductors A11L4 and A21L5 are the driver plate and the pa grid chokes and A18LN1 and A18LN2 provide neutralization.

www.SteamPoweredRadio.com

The power amplifier is a plate-tuned 4CX15000A that is operated class C. The tube screen is grounded and the cathode is placed -750 volts below ground. A fixed bias from the pa bias power supply is applied to the control grid through A22TB8-19, A22R37, and A22TB8-20. When an input signal is present, grid current flows and develops grid leak bias across A18R35 (831G-2 or A18R36 (831G-2B). The increased negative potential on the grid causes the diode in the pa bias supply to reverse bias, preventing grid current flow through the supply. Hall-effect probe A22Z4 monitors the amount of grid current for control panel metering.

The power amplifier plate circuit is coarse tuned from 88 to 108 MHz by resonating an adjustable coaxial resonator. (See figure 4-2.) The resonator is the area between the tube shelf and the sliding shorting plane. Two motor-driven capacitors permit more precise tuning (A18C51) and loading (A18C50). RAISE/LOWER switches S3 (PA TUNING) and S4 (PA LOADING) on control panel A1 control associated relays on tuning/power control relay board A7. The relays, in turn, control the capacitor drive motors.

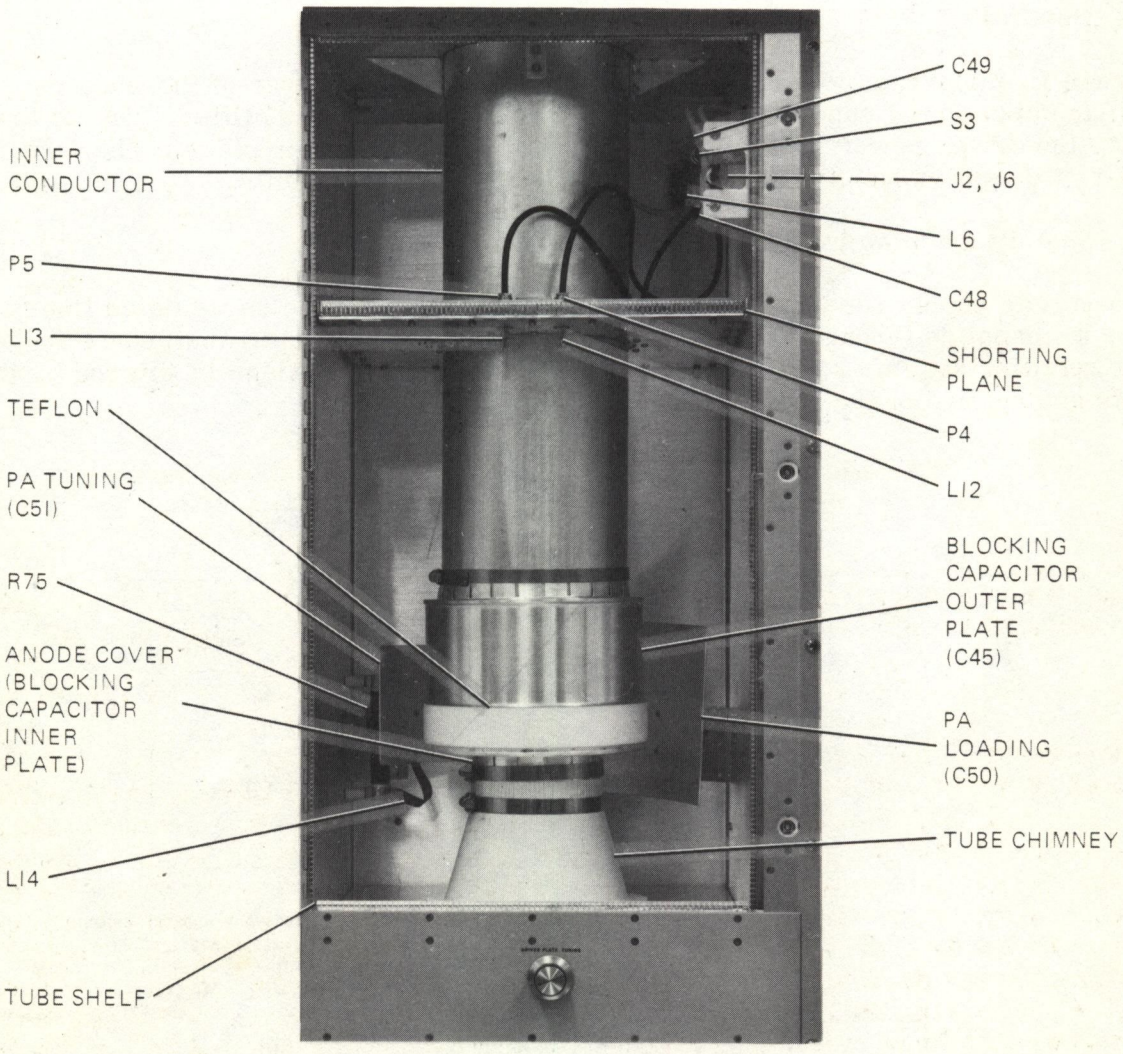

Figure 4-2. Plate Cavity.

If You Didn't Get This From My Site,
Then It Was Stolen From....
www.SteamPoweredRadio.com

DC blocking capacitor A18C45 is formed by placing a Teflon cylinder over the pa anode cover and then a metal cylinder over the Teflon cylinder. Figure 4-3 shows the electrical equivalence of the plate tuning circuit.

4.3.4 Low-Pass Filter A13

Low-pass filter A13 consists of two coaxial filters in tandem. The first filter has a cutoff of 130 megahertz, while the second has a cutoff of 300 megahertz.

4.3.5 Directional Coupler A16

Directional coupler A16 provides monitor samples for auto power control unit A3. Forward power from C3 is rectified by CR2, filtered, and applied to amplifier AR2 in auto power control unit A3. Reflected power is acquired in the same manner through C1 and applied to amplifier AR1.

4.4 Power Supplies and Power Control Circuits

4.4.1 General

There are five separate power supplies in the transmitter. Three of the five, the plate, screen and bias power supplies, provide voltage to the power amplifier. One of the remaining two, the driver power supply, furnishes voltage to the driver stage. The remaining one, the 28-volt dc power supply, provides power to the control circuits.

4.4.2 28-Volt DC Power Supply PS1

The 28-volt dc supply receives its 3-phase 60-Hz input from the unregulated line voltage. The input is applied through circuit breaker A6CB1 and stepdown transformer T1 to 3-phase bridge rectifier assembly CR1. The 28-volt dc output of the bridge is filtered by the RC circuits and applied to the control circuits.

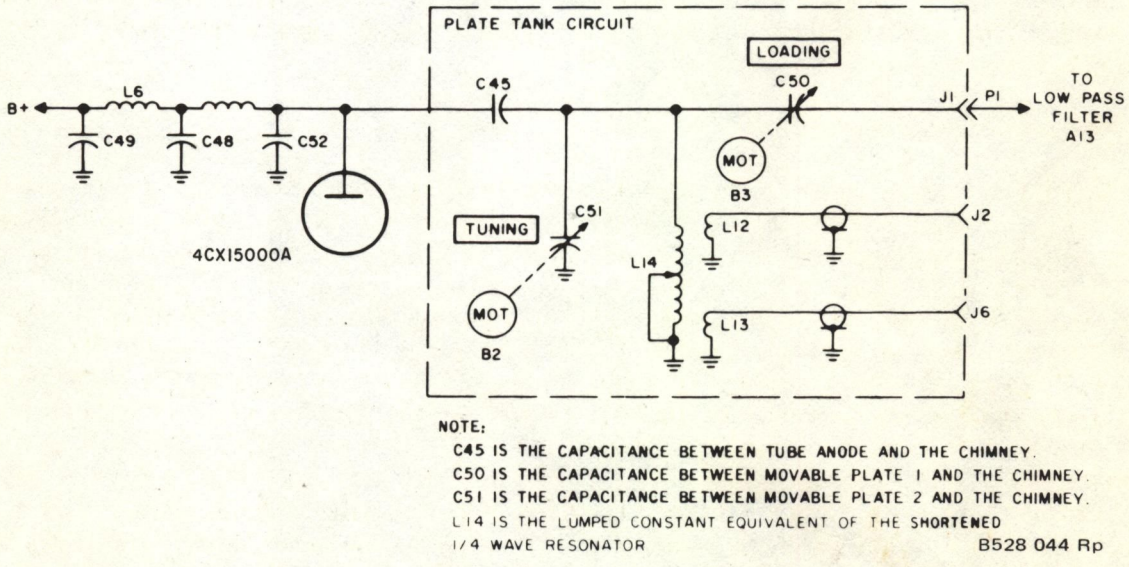

Figure 4-3. 831G-2 20-kW/831G-2B 22.5-kW FM Transmitter, Schematic Diagram, Output Network.

www.SteamPoweredRadio.com

4.4.3 PA Bias Power Supply PS2

The pa bias power supply provides the power amplifier with fixed grid bias that holds the tube near cutoff when no signal is present on the grid. Single-phase primary power is applied through circuit breaker A6 and step-up transformer T1 to a bridge rectifier network. An L-section filter is formed by C1 and L1.

The power supply output is applied to the grid of the power amplifier through CR5. CR5 also blocks grid current flow through the supply when the grid leak bias exceeds the fixed bias. A sample of the bias voltage is also applied through R3 to front panel meter A1M1 for monitoring.

4.4.4 PA Plate Power Supply

The pa plate power supply provides plate voltage to the power amplifier. Primary components of the supply are transformer T1, 3-phase bridge rectifier assembly Z1, filter choke L1, and filter capacitor C3. A meter multiplier board, A15, samples plate voltage and allows constant monitoring. Input power to T1 is controlled by scr (silicon-controlled rectifier) power control unit A9. This unit, connected as a closed loop regulator, maintains constant power output to offset conditions of varying input power.

4.4.5 Power Control Unit A9

Power control unit A9 adjusts the 3-phase ac power input to the pa plate, the pa screen, and the driver power supplies through transformers T1, T2, and T3 respectively. Unit A9 consists of two major component assemblies-scr assembly A9Z1 and firing control unit A9AR1. Scr assembly A9Z1 has three scr pairs; one pair in series with each primary winding of the 3-phase power transformers. Each pair is connected within the inside-delta circuit of the transformer primaries. Scr firing control unit A9AR1 consists of three control cards. Each control card controls the firing (turn-on) point of one scr pair. Relay A9AR1K1 deenergizes on PLATE OFF, disabling the three gating cards and driving the scr's.

A common control signal from power control regulator A8 is fed simultaneously to each control card. This control signal governs the firing of the scr pairs that regulate the input power applied to the power supplies.

4.4.6 Power Control Regulator A8

Power control regulator A8 provides the necessary control signals to operate power control unit A9. A8 supplies a soft-start pa plate supply turn-on signal, a negative voltage for manual power control, and amplifier-mixer functions for automatic power control.

When the PLATE ON switch is pressed, +28 volts is supplied to XA8-27 through plate-on relay A19K3, phase-loss relays A19K10, 11, and 5, and time-delay relay A19K4. (See figure 4-4.) The +28 volts activates transistor A8Q1 to turn on relay K12. Relay K12 supplies 3-phase ac control power to A9AR1. An RC time delay circuit formed by A8R2 and A8C1 maintains K12 closed for a short interval after the PLATE OFF switch is pressed. Transistors A8Q2, Q3, and Q4, also energized by the +28 volts, provide the dc turn-on signal to unit A9AR1. On power control regulator A8, R8, R9, and C2 modify this signal to soft-start the high-voltage pa plate power supply. Zener regulator A8VR2 provides a -10-volt voltage to MANUAL power adjust resistor A20R43. Transistors A8Q5 and A8Q4 amplify the automatic control signal from A3 and apply the signal to A9AR1TB2-1 when the MANUAL/AUTOMATIC switch is in AUTOMATIC. A8C5 and A8R5 phase-compensate the power control servo loop.

www.SteamPoweredRadio.com

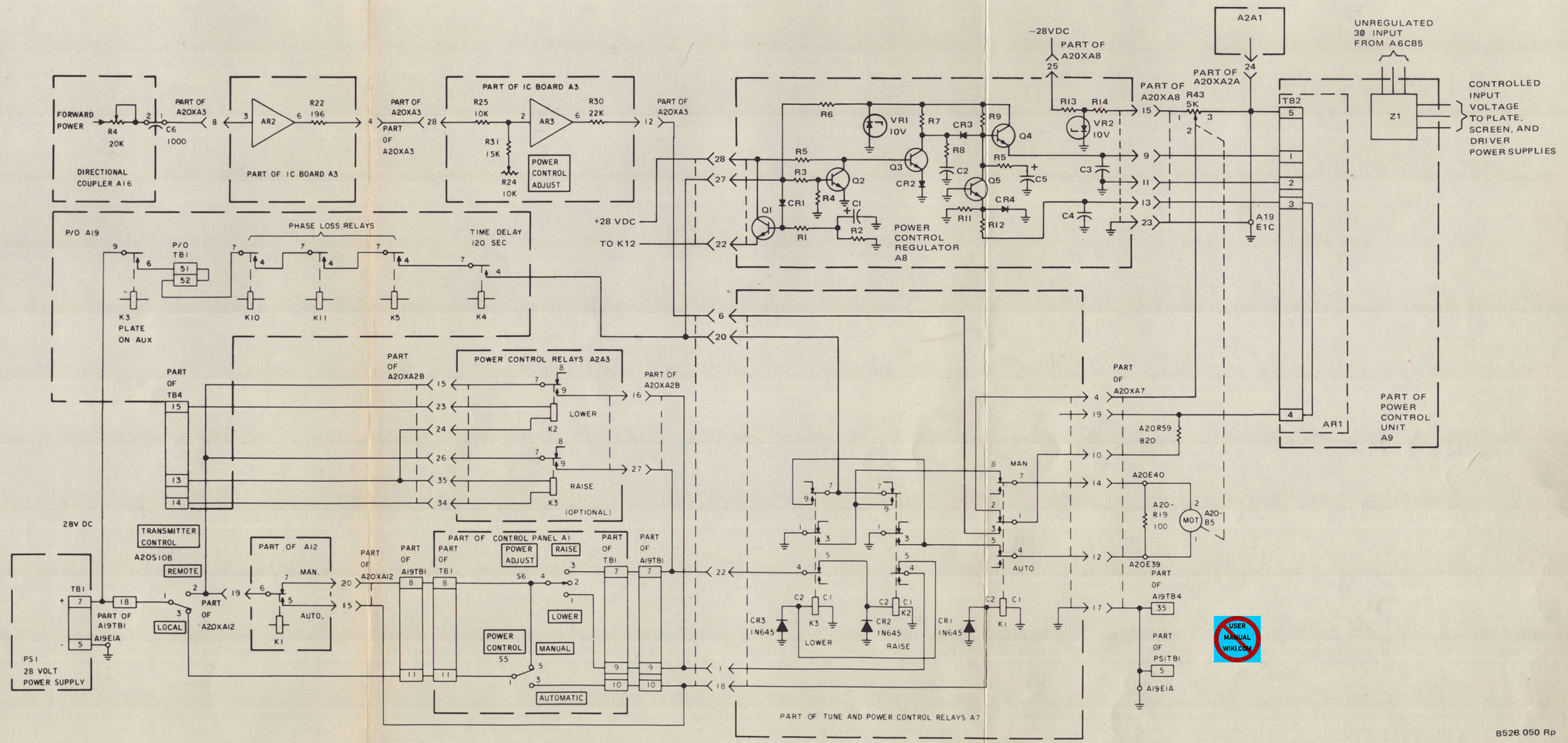

If You Didn't Get This From My Site,
Then It Was Stolen From....
www.SteamPoweredRadio.com

Figure 4-4. Power Control Circuits, Schematic Diagram.

4.4.7 PA Screen Power Supply

The 3-phase regulated voltage from the power control unit is applied through transformer T2 to a silicon 3-phase full-wave bridge assembly, Z2, in the pa screen power supply. The output of Z2 is filtered and applied to the cathode circuit of the power amplifier at the secondary center tap of filament transformer A18T5. The pa screen power supply also provides -28 volts, obtained from the junction of resistors A17R4 and A17R18, for vswr calibrate and auto power control A3.

4.4.8 Driver Power Supply

The driver power supply provides plate and screen voltages for the driver stage. The 3-phase ac power for the primary of T3 is supplied by power control A9. The output of T3 is applied to a silicon 3-phase full-wave bridge assembly, Z3, with RC compensation. The output of the rectifier bridge is filtered and applied to the driver plate circuit via panel grounding switches S8 and S9. The driver screen voltage, developed at the junction of A17R34 and A17R25 is applied through a metering circuit to the driver screen circuit. Gaseous protector A17E2B shorts excessive transient voltages to ground. Portions of the supply output are supplied to control panel A1 for driver plate voltage (from across A14R32) and screen voltage (from across A17R3) monitoring.

4.4.9 Filament Voltage Regulator A5

Filament voltage regulator A5 maintains a constant rms voltage on the filaments of the driver and power amplifier. One of two scr's (A20Q1 or A20Q2) is triggered on each alternation of the input line voltage (figure 4-5). When the amplitude of the input voltage increases, the regulator prevents the scr's from firing until later in the cycle. The resultant rms voltage on the tube filaments remains constant. When the line voltage decreases, the scr's fire sooner and permit more of the input to appear on the filaments. When input voltage is first applied, a soft-start feature gradually applies the filament voltage through a period determined by the charge time of C3, CR5, and R7. When the potential at the top of C3 equals the potential on the collector of Q2, the path is opened and normal operation begins.

The bridge circuit rectifies the incoming ac and supplies the unfiltered voltage to R11 and R12. During normal operation, C2 charges through CR6, R9, and R7. When the top of C2 becomes sufficiently positive, unijunction transistor Q3 fires and triggers the scr. When C2 has discharged through Q3, the action begins again. The circuit is timed so that Q3 fires on each alternation of the incoming ac.

When an increase in line voltage occurs, the current through RV1 increases thus decreasing the resistance from the base of Q1 to ground. When this occurs, Q1 conducts less, causing Q2 to conduct more. The collector of Q2 becomes less positive, increasing the RC charge time of C2.

The delay prevents Q3 from firing until later in the cycle. The resulting output voltage on T1 is thus maintained at its preset value. If a decrease in line voltage occurs, C2 charges faster and fires Q3 earlier in the cycle.

www.SteamPoweredRadio.com

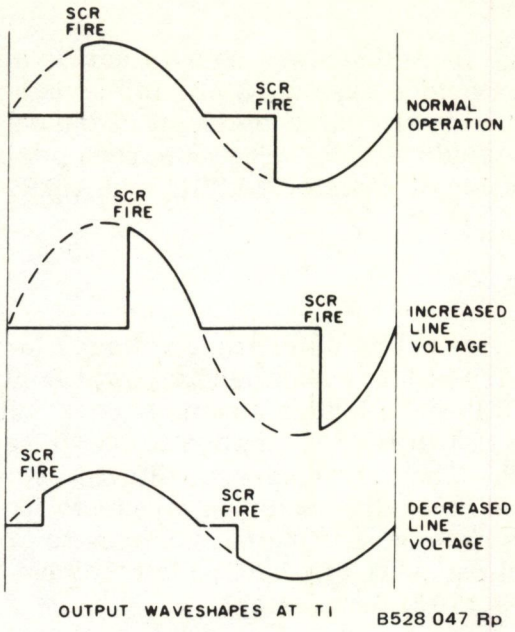

Figure 4-5. Filament Regulator Output Waveshapes.

4.4.10 Filament Voltage Distribution

The filament voltage distribution is shown in figure 4-6. Filament voltage regulator A5 maintains a constant rms voltage on the filaments as discussed in paragraph 4.4.9.

4.5 Primary Power Distribution Control and Overload Circuits

4.5.1 Primary Power Distribution

The 60-Hz, 3-phase primary power is distributed to the various circuits of the transmitter via circuit breakers and fuses mounted on circuit breaker panel A6 (figure 4-7). PA PLATE POWER SUPPLY circuit breaker A6CB5 not only controls application of primary power to the pa plate power supply, but also controls application of primary power to the pa screen and driver power supplies through additional associated circuit breakers, A6CB4 (PA SCREEN SUPPLY) and A6CB3 (DRIVER POWER SUPPLY). One side of each phase of the primary power is applied to the respective primary winding of power transformers T1 (pa power supply), T2 (pa screen power supply), and T3 (driver power supply). The other side of each phase is applied to the transformers primaries through fuses A6F15, F16, and F17 (scr energy limiting) and power control A9. Loss of a phase, either externally or by excessive phase current causing the respective phase fuse to blow, deenergizes the associated phase-loss relay and causes the transmitter to revert to a plate-off condition.

The 28 VDC POWER SUPPLY circuit breaker, A6CB2, controls application of primary power to cavity blower B1 through filament-on relay A19K2 and FAN fuses A6F7, F9, and F12. Relay A19K2 is energized when the filaments are turned on by the operator during equipment turn-on.

www.SteamPoweredRadio.com

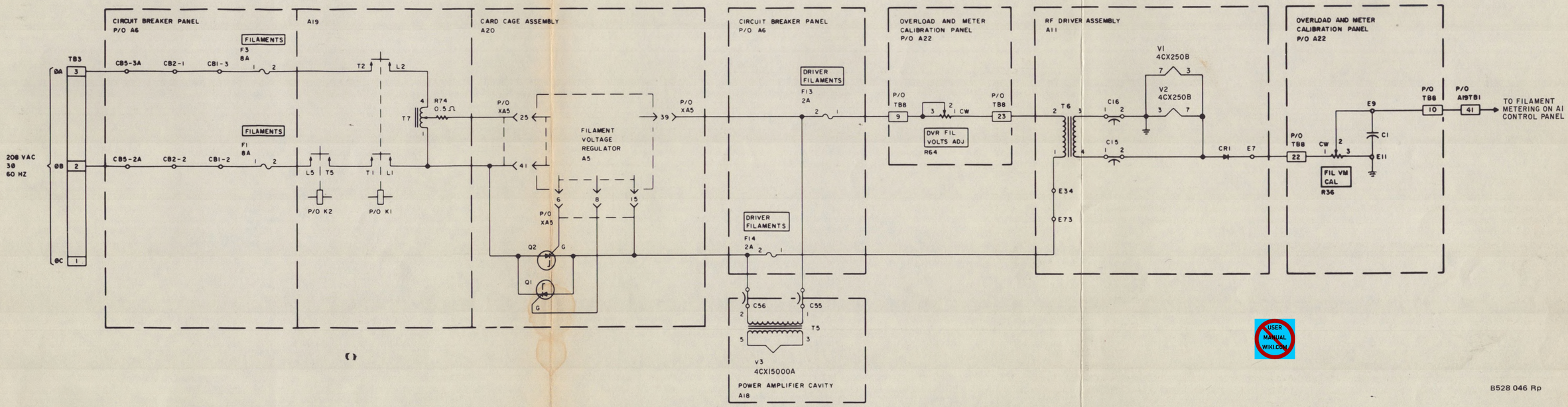

USER MANUAL WIKI.COM

B528 046 Rp

If You Didn't Get This From My Site,
Then It Was Stolen From....
www.SteamPoweredRadio.com

Figure 4-6. Filament Voltage Distribution.

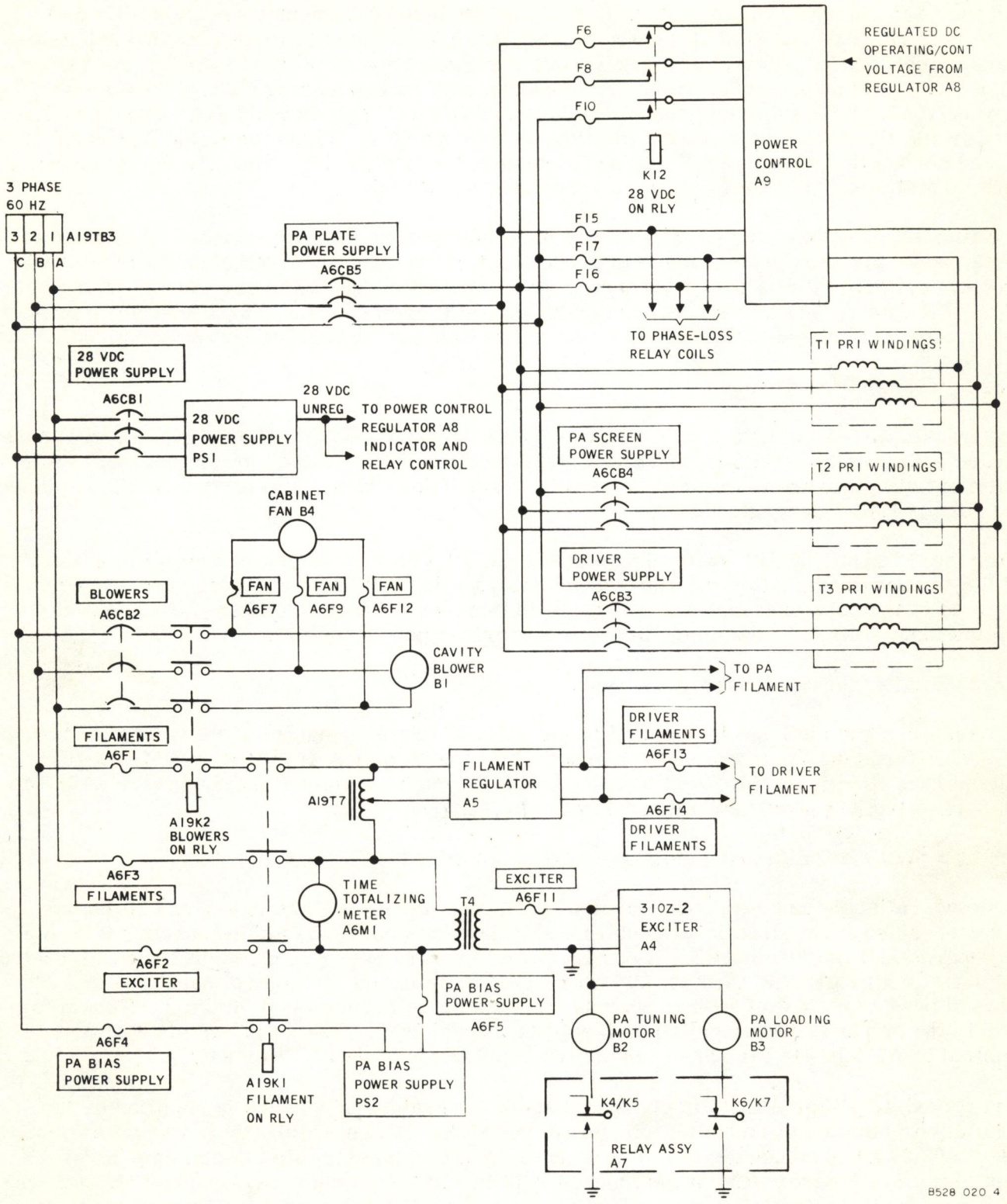

Figure 4-7. Primary Power Distribution.

www.SteamPoweredRadio.com

Application of primary power to the filament circuits, the exciter, the pa bias power supply, and the pa tuning and loading motors is relay controlled. Filament-on relay A19K2 and blower-on relay A19K1 control application of power to filament regulator A5 through auto-transformer A19T7. Relay A19K1 also controls application of power to 310Z-2 exciter A4, to pa bias power supply PS2, and, in conjunction with tuning/loading control relays on assembly A7, to the pa tuning and loading motors (B2 and B3 respectively). Power to the exciter and the motors is through isolation transformer T4. Time-totalizing meter A6M1 is placed across the primary of T4. The filament relay is energized when the cavity blower has built up sufficient air flow to close an associated air switch.

The filament, exciter, and pa bias supply input power circuits are protected by associated fuses, some of which protect more than one input power circuit. FILAMENTS fuse A6F3 protects not only the filament input power circuit but also that of the exciter and pa motors. EXCITER fuse A6F11 serves only the exciter and the motors. EXCITER fuse A6F2 protects not only the exciter/motor circuit but also the pa bias power supply input power circuit.

4.5.2 Transmitter Turn-on

The transmitter is energized by pressing FILAMENT ON switch S10 in the A1 control panel (figure 4-8). Relay A19K2 is energized and power is applied to the blower motors. After sufficient air pressure is created in the power amplifier cabinet, air switch A18S1 is closed and relay A19K1 is energized.

After the FILAMENT ON switch is pressed, the PLATE ON switch is pressed and relay A19K3 is energized. After the 120-second delay, relay A19K4 is energized and +28 volts is supplied to the base of transistor A8Q3. This turns on control amplifier A9AR1, which applies input voltage to the plate, screen, and driver power supplies.

4.5.3 Exciter Power Control Override

An output override voltage is supplied to the 310Z-2 exciter when the plate voltage is turned off. This turns off the output of the exciter while the pa plates are off (figure 4-9). The voltage is applied from the 28-volt power supply through contacts 7 and 8 of relay A19K3 to the 310Z-2 exciter power supply regulator. TB1—#4

4.5.4 VSWR Calibrate and Auto Power Control Unit A3

The vswr calibrate and auto power control unit, A3, monitors the forward and reflected power received from directional coupler A16. Forward power is applied through R18 to pin 3 of operational amplifier AR2. A portion of the forward power is also applied to the control panel RF WATTMETER through R7 that is used to calibrate the control panel meter. The forward power on pin 3 of AR2 is compared with a dc reference level on pin 2. This reference is the output of AR2 supplied as feedback through R15. The output on pin 6 of AR2 is supplied to A19TB4-34 for remote monitoring and to pin 2 of amplifier AR3.

Operational amplifier A3AR3 is connected as an integrator. Feedback is supplied by the parallel combination of capacitor C5 and resistor R8. During automatic power operation, the output of A3AR3 is connected to power control A9 through relay A7K1-3 and power control regulator A8. Resistor R24 in the input of AR3 increases or decreases the transmitter output power during automatic power operation by increasing or decreasing the output of AR3.

www.SteamPoweredRadio.com

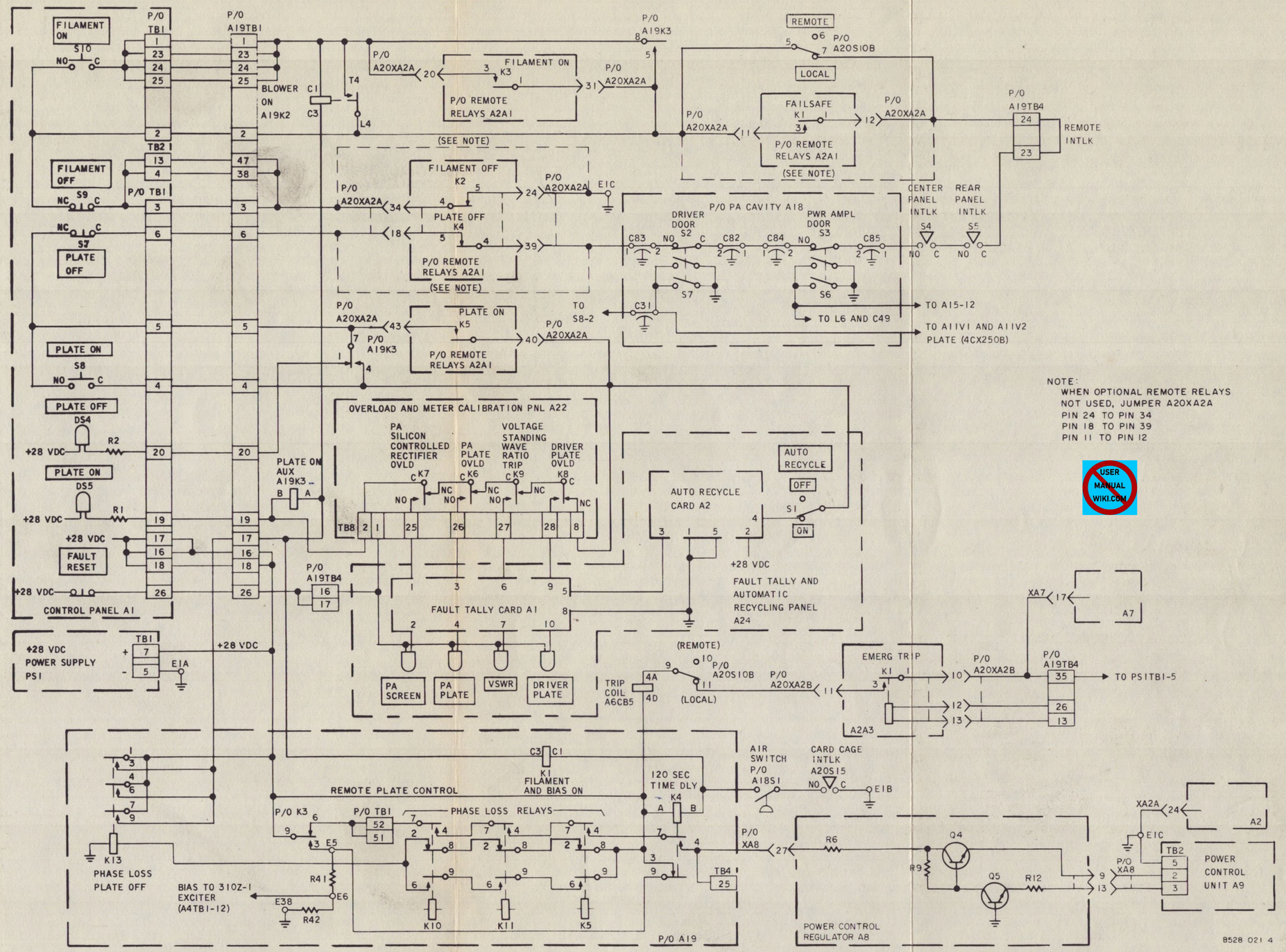

NOTE:
WHEN OPTIONAL REMOTE RELAYS NOT USED, JUMPER A20XA2A
PIN 24 TO PIN 34
PIN 18 TO PIN 39
PIN 11 TO PIN 12

USER MANUAL WIKI.COM

Figure 4-8. Power ON-OFF Control Circuits.

If You Didn't Get This From My Site,
Then It Was Stolen From....
www.SteamPoweredRadio.com

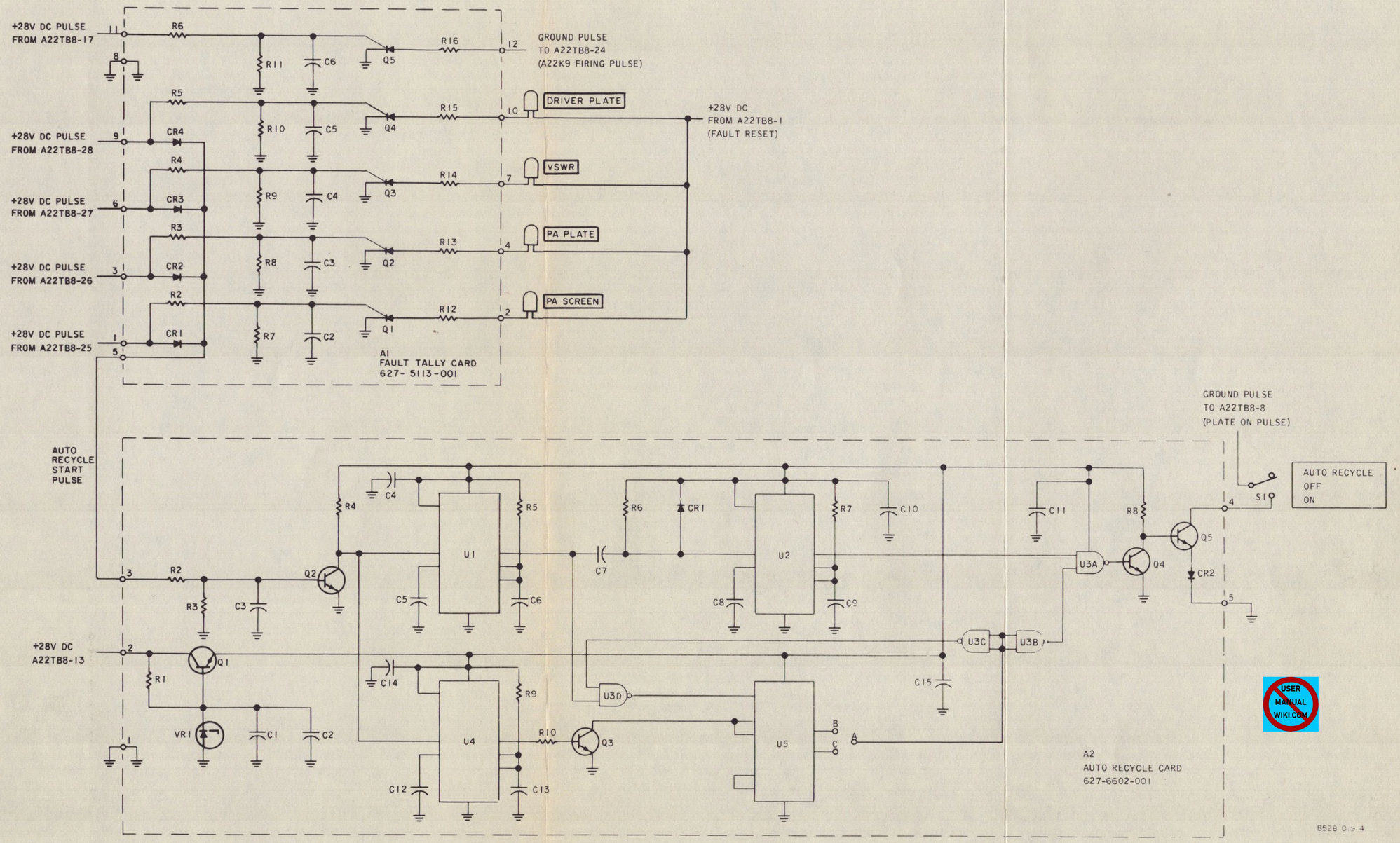

If You Didn't Get This From My Site,
Then It Was Stolen From....
www.SteamPoweredRadio.com

Figure 4-9. Fault Tally and Automatic Recycle Panel, Simplified Schematic.

Reflected power is applied to pin 3 of AR1 through R3. A portion of the reflected power is also applied to the control panel RF WATTMETER through meter calibrate resistor R1. The output of AR1 is applied to the trigger of A24Q5 through A22TB8-17. When excessive reflected power exists in the transmitter and trip disable switch A3S1 is closed, AR1 produces an output that triggers scr A24Q5. Scr A24Q5 conducts and energizes relay A22K9, which removes power from the transmitter. (See paragraph 4.5.6.).

OFFSET ZERO controls R11 (AR1) and R19 (AR2) each prevents an output at pin 6 when no input exists at pin 3 of the related amplifier.

4.5.5 Tune and Power Control Relay Assembly

The power control relays perform several functions. They select either automatic or manual power control, and in the manual mode, they control the raising and lowering of transmitter power (figure 4-4). When POWER CONTROL switch A1S5 is placed in the AUTOMATIC position, +28 volts is applied through TRANSMITTER CONTROL switch A20S10B to relay A7K1. When A7K1 is energized, the output of A3AR3 is supplied through contacts 1 and 3 of relay A7K1 and resistor A20R59 to A9AR1TB2-4.

When POWER CONTROL switch A1S5 is in the MANUAL position, relay A7K1 is deenergized. Power is increased by placing switch A1S6 in the RAISE position. The +28 volts from A20S10B pin 3 is applied through A1S5 pin 5, A1S6 pin 3, and relay contacts 4 and 5 of A2K3 to energize relay A7K2. When A7K2 is energized, +28 volts is applied to motor A20B5 at point E40 through relays A19K3, A19K11, A19K5, and A19K4. Ground is applied at point E39 through contacts 1 and 3 of A7K2. Motor A20B5 is turned on and adjusts the resistance of A20R43 to increase the transmitter power output.

When switch A1S6 is placed in the LOWER position, relay A7K3 is energized and +28 volts is applied to motor A20B5 at point E39 through contacts 7 and 9 of A7K3. Ground is applied at point E40 through contacts 1 and 3 of A7K3. The motor direction is reversed and the transmitter output is decreased.

4.5.6 Overload Protection

Relays A22K6, A22K7, A22K8, and A22K9 are adjusted to energize and remove power from the transmitter when an overload occurs in the plate, screen, or driver supply or when the vswr exceeds a preset level. Screen current at the junction of A14R14 and A14R15 is applied to relay A22K7 through resistor A22R65. Plate current at the junctions of A14R13 and A14R16 is applied to relay A22K6. Driver current, from the negative terminal of A10Z3 in the driver power supply, is applied to relay A22K8 through resistor A22R60. Current from scr A24Q5 is applied to relay A22K9 through A22TB8-24. Each relay is adjusted to trip after detecting a certain current level (figure 4-8). The relay contacts are in series with relay A19K3. If an overload occurs, the corresponding relay trips and removes power from the transmitter.

4.5.7 Fault Tally and Automatic Recycle Panel A24

Fault tally and automatic recycle panel A24 contains circuits on two cards. Fault tally card A24A1 provides overload indication and memory. Auto recycle card A24A2 provides a timed recycle function allowing recycling either two or four times (depending on strapping connections) in the event of an overload. See figure 4-9 for a simplified schematic.

www.SteamPoweredRadio.com

4.5.7.1 Fault Tally Card A24A1

Fault tally card A24A1 contains five scr (silicon-controlled rectifier) circuits, four that provide overload memory functions and one that provides a firing pulse to vswr overload relay A22K9.

When an overload occurs in the pa plate, pa screen, vswr, or driver plate, a 28-volt pulse is supplied to the appropriate scr (Q1 through Q4). The scr latches, and lights its associated warning lamp (A24DS1 through A24DS4) to indicate which overload function has occurred. The carrier is removed from the air by overload relays A22K6, A22K7, A22K8, or A22K9 (figure 4-8). The 28-volt pulse that triggers the scr is simultaneously routed to card A24A2 via diode CR1, CR2, CR3, or CR4 to be used to automatically restart the transmitter.

Scr Q5 and its associated circuits are used to fire vswr relay A22K9. The gate pulse is derived from vswr trip disable switch A3S1. The scr momentarily energizes relay A22K9 to remove power from the transmitter (figure 4-8).

All lamps that have been lighted by an overload function remain lighted until FAULT RESET switch A1S11 on the main control panel is pressed.

4.5.7.2 Auto Recycle Card A24A2

Auto recycle card A24A2 provides a timed, automatic restart pulse up to four times in a 30-second period. The supplied card is connected so only two restart pulses will occur in a 30-second period; but may be reconnected to allow four restart pulses in a 30-second period. Conversion from the 2-pulse to the 4-pulse production may be accomplished by removing the jumper between terminals A and B on the card and replacing it between A and C.

The auto recycle begins when the 28-volt pulse from A22A1 is applied to terminal 3 causing transistor Q2 to conduct. The Q2 output is fed to timers U1 and U4. Timer U1 provides a 0.5-second delay, then triggers timer U1, which generates a pulse 0.5 second in length. This pulse is fed through gate U3A to inverter Q5, which closes the PLATE ON circuit through switch S1.

Gate U3D conducts the output pulse from timer U1 to counter U5. Counter U5 counts the number of recycle pulses and provides a logic 1 output at terminal C when four pulses have been received. Depending on which terminal has been strapped to terminal A, two or four recycle attempts in a 30-second period will close gates U3A, U3B, U3C, and U3D preventing any further attempts by the card to restart the transmitter. When the 30-second period of timer U4 has elapsed, a pulse is generated, inverted by Q3, and applied to U5 to reset it to zero. This clears the memory and allows another sequence to begin. If the maximum count of two or four pulses has not been received in the 30-second period, the timer will also reset the counter automatically.

Switch S1 may be used to disable the auto recycle card when desired. This is usually done during tune-up or maintenance procedures.

4.5.8 Remote Control Relays

Latching relays A12, power control relays A2A3, and remote relays A2A1 are optional units that provide transmitter control from a remote location. The latching relays permit the transmitter to interface with remote control panels that operate on 28/48 volts dc, negative or positive common, or 117 volts ac. Unit A12 also provides remote selection of normal or automatic power control and remote selection of stereo and monaural excitation. Unit A2A3

www.SteamPoweredRadio.com

controls the remote manual raising or lowering of power. It also provides an emergency trip feature that removes power from the transmitter in an emergency. Unit A2A1 provides the holding relays for filament and plate remote on/off controls. The unit also provides a fail-safe feature that removes power from the transmitter when the external control voltage is lost.

4.5.8.1 Latching Relays A12

Unit A12 is connected to the remote control panel through TB4 (figure 4-10). When A10B on the transmitter is in the remote position, +28 volts is applied to contact 6, relay A12K1. If the remote control MANUAL-AUTOMATIC switch is in the AUTOMATIC position, +28 volts is applied to energize relay K1 in unit A7. When relay A7K1 is energized, the transmitter power is controlled automatically (paragraphs 4.5.4 and 4.5.5). When the remote control MANUAL-AUTOMATIC switch is in the MANUAL position, relay A7K1 is deenergized and the transmitter responds to manual power control.

Unit A12 also provides remote selection of monaural or stereo excitation to the exciter.

Strapping information for the latching relays is given in figure 4-11.

4.5.8.2 Power Control Relays A2A3

Unit A2A3 provides remote manual power lower and raise control (figure 4-12). When power is decreased at the remote control panel, relay A2A3K2 is energized and closed contacts 7 and 9 provide +28 volts to relay A7K2, contacts 4 and 5. When the power is increased at the remote control panel, relay A2A3K3 is energized and closed contacts 7 and 9 provide +28 volts to relay A7K3, contacts 4 and 5. (The operation of unit A7 is discussed in paragraph 4.5.5.)

Emergency trip relay A2A3K1 provides the remote location with an alternate means of removing power in the event of an emergency (figure 4-8). During abnormal operation, A2A3K1 is energized from the remote control panel and trips circuit breaker A6CB5, which removes power from the transmitter.

4.5.8.3 Remote Relays A2A1

Remote relays unit A2A1 parallels the front panel control operations. All relays and switches are momentary in operation. The function of each relay is illustrated in figure 4-8. Fail-safe relay A2K1 is energized only when +28 volts is present in the control circuit. If +28 volts is lost, the relay deenergizes and removes power from the transmitter.

4.5.8.4 Remote Connections

Typical remote interconnections to remote control terminal board TB4 are given in figure 4-13.

www.SteamPoweredRadio.com

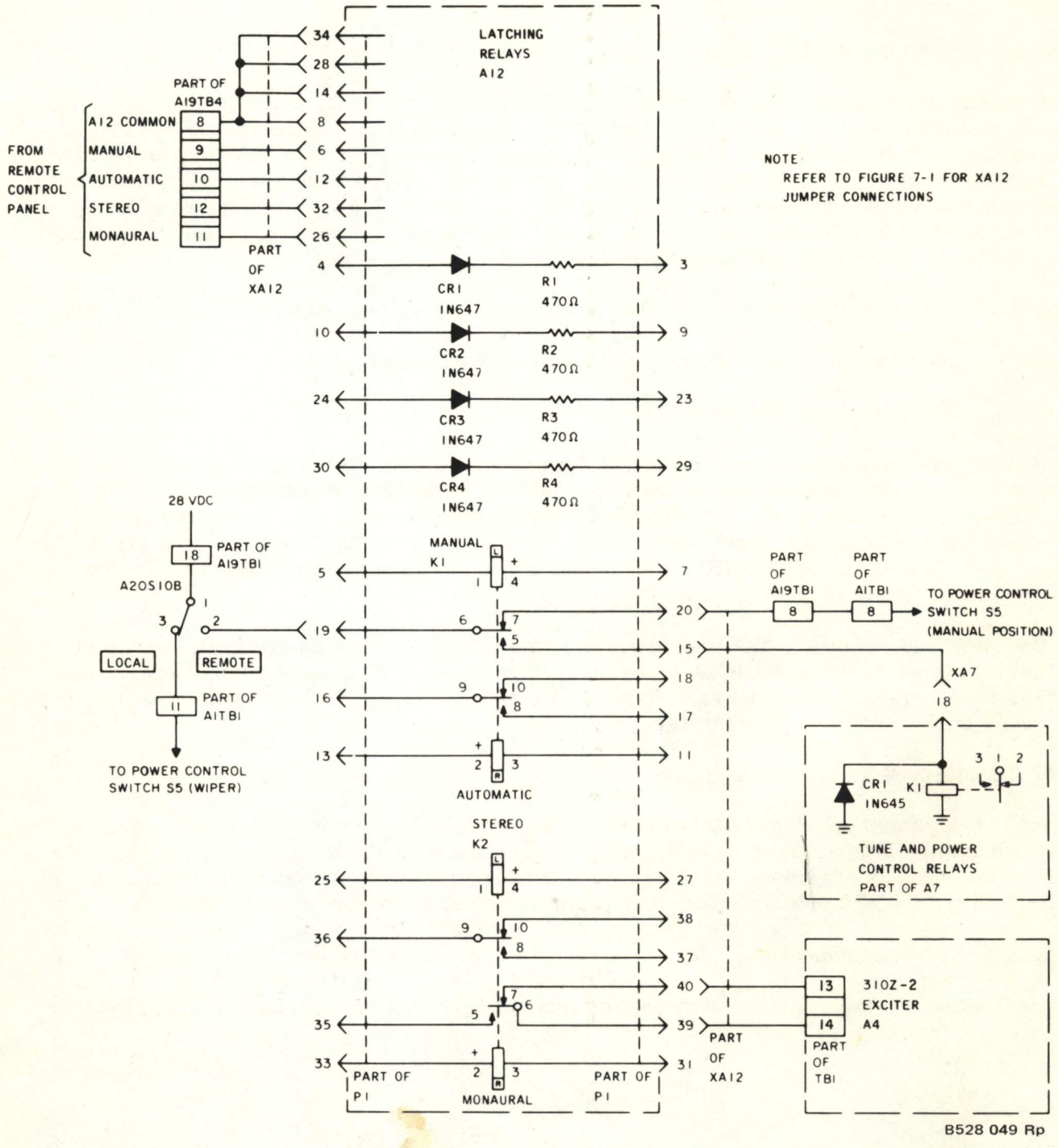

Figure 4-10. Latching Relays A12, Simplified Schematic.

www.SteamPoweredRadio.com

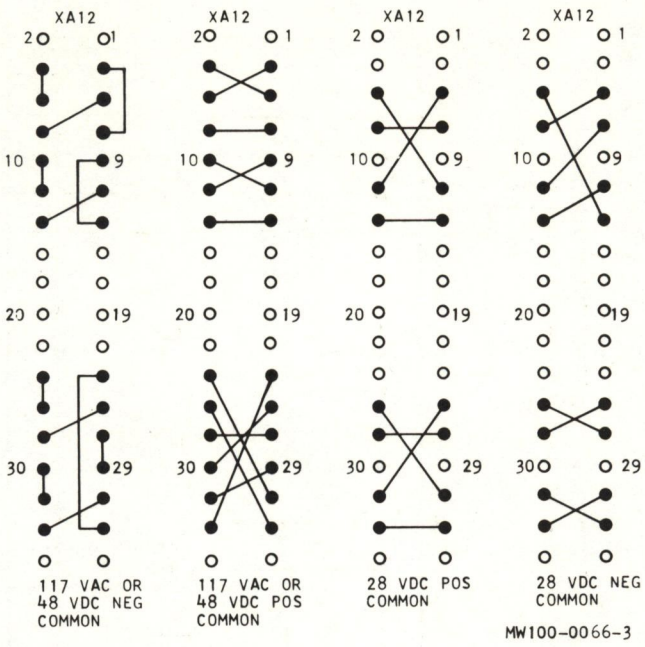

Figure 4-11. Remote Control Strapping, Latching Relay Board (A12).

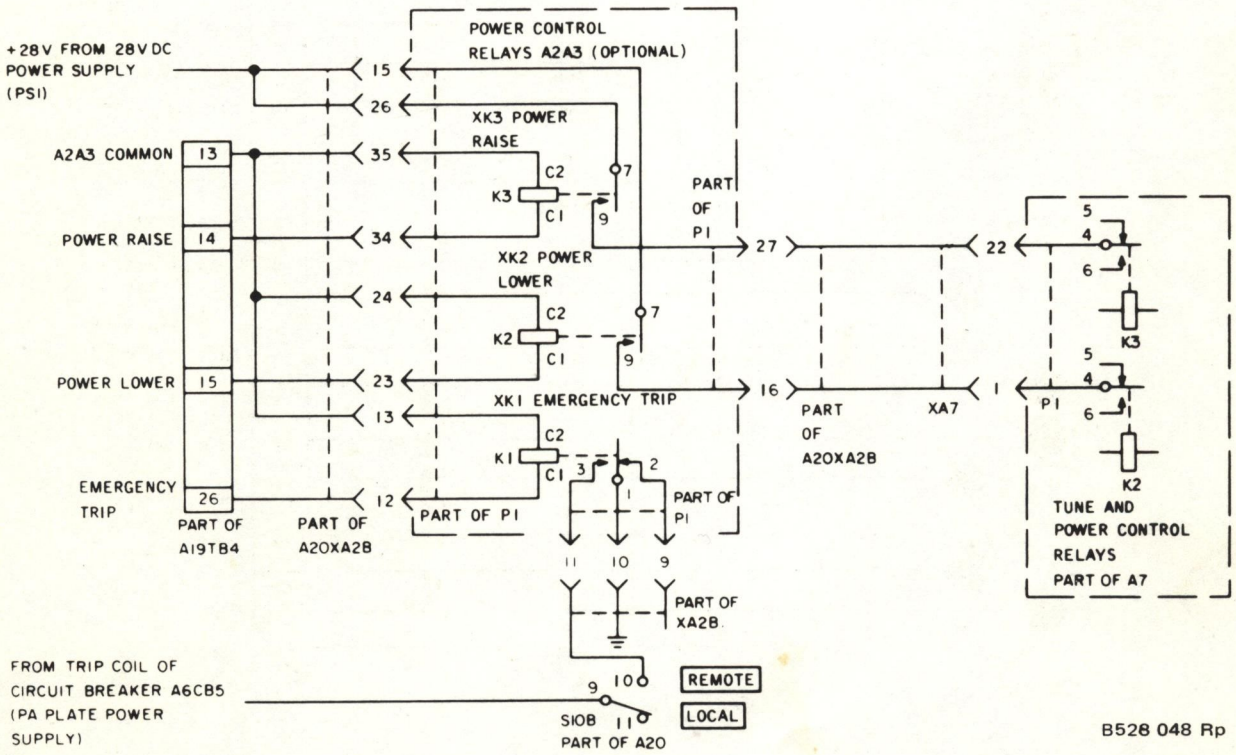

Figure 4-12. Power Control Relays A2A3, Simplified Schematic.

www.SteamPoweredRadio.com

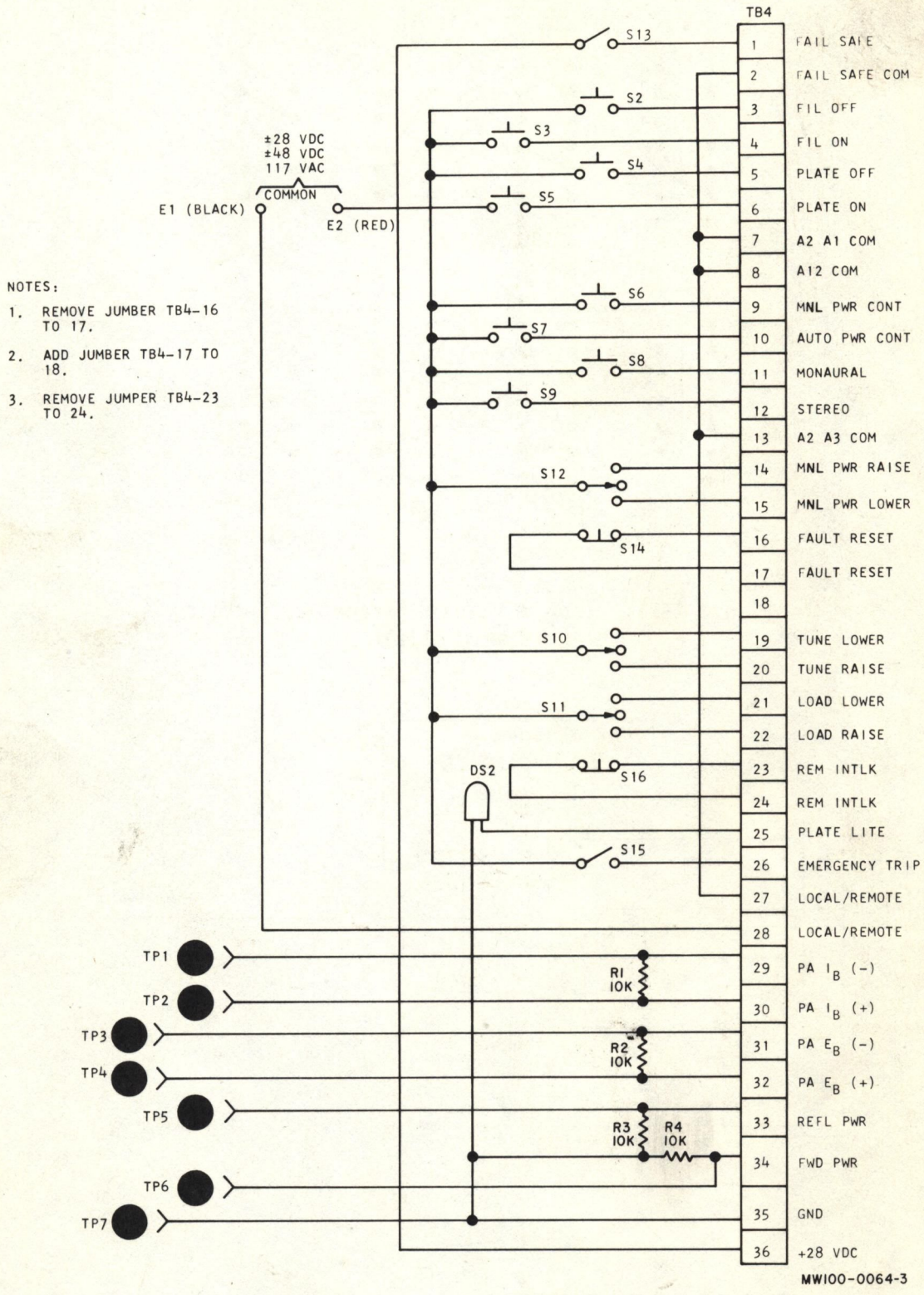

Figure 4-13. Typical Remote Interconnections to Remote Control Terminal Board TB4.

www.SteamPoweredRadio.com

2/16/76

REMOTE CONTROL
831E/F/G

TYPICAL REMOTE CHANNEL ASSIGNMENT

CH.	CONTROL FUNCTION	METER FUNCTION
1.	Fil off/on	-
2.	Plate off/on	Plate Voltage
3.	Manual/Auto	Plate Current
4.	Power Raise/Lower	Forward Power
5.	Mono/Stereo	Reflected Power

PA Loading/Tuning and Emergency Trip are not usually connected

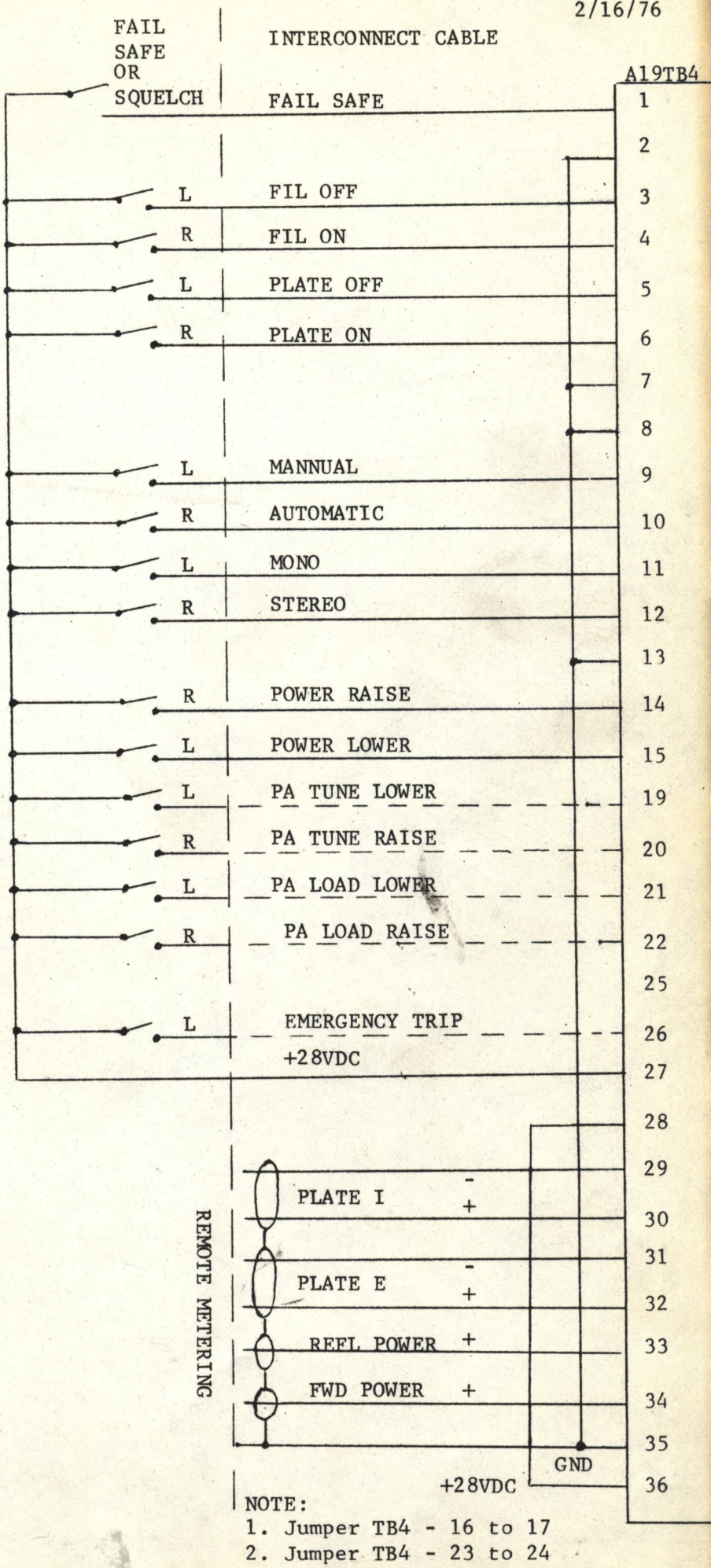

NOTE:
1. Jumper TB4 - 16 to 17
2. Jumper TB4 - 23 to 24
(not shown on above drawing)

www.SteamPoweredRadio.com

Substitute in Lieu of / 24

5.1 General

The transmitter is carefully inspected and adjusted at the factory to reduce maintenance to a minimum. To ensure peak performance, adhere to a regular schedule of periodic checks and maintenance procedures. Refer to the parts list, section 6, for component location in the transmitter.

WARNING

HIGH VOLTAGES are exposed when cabinet doors or access panels are opened.

DEATH ON CONTACT may occur if you fail to observe safety precautions. When working inside the equipment, be sure that all circuit breakers are OFF and that primary power is disabled at the wall disconnect or circuit breaker unless otherwise directed. Always short all high-voltage terminals to ground with the grounding stick provided.

5.2 Cleaning

Clean the transmitter when dust accumulation occurs anywhere inside the equipment. A solvent composed of 25 percent methylene chloride, 5 percent perchloroethylene, and 70 percent dry cleaning fluid may be used as a cleaning material.

5.2.1 General Cleaning Procedures

a. Remove dust from chassis, panels, and components with a soft-bristled brush.

b. Remove foreign matter from flat surfaces and accessible areas with a lintless cloth moistened with solvent. Dry with a clean, dry, lintless cloth.

c. Wash switch and relay contacts with relay contact cleaner and less accessible areas with solvent lightly applied with a small soft-bristled brush.

5.2.2 Air Filter

The air filter, on the 831G-2 transmitter, should be cleaned whenever a perceptible quantity of dust and dirt accumulates on the filter element. Remove and clean the filter as follows:

a. Remove the cross-wire brace that holds the filter in place.

b. Remove the filter.

c. Use a vacuum cleaner to remove heavy dust accumulation from the filter.

d. Blow a stream of air through the filter in a direction opposite to normal airflow.

www.SteamPoweredRadio.com

e. Wash the filter in a solution of hot water and detergent.

f. Replace the filter when dry.

NOTE

On the 831G-2B transmitter, air filters are contained in the rear panels of the right and center bays. The filters are furnace type filters that measure 16 by 20 by 1 inches and are available locally. These filters should be replaced in lieu of cleaning.

5.2.3 Tube Cleaning

The power amplifier and driver tubes should be cleaned when a visible quantity of dust accumulates on the cooling fins of the tubes. Carefully remove the tubes from their sockets and clean each with a dry, oil-free jet of air.

5.3 Inspection

Inspect the transmitter at least once a week. Check all metal parts for corrosion and general deterioration. Examine wiring and components for signs of overheating. Ensure that all controls are operating smoothly. Inspect all connections and tighten any nuts, screws, or bolts found loose. Examine the blower and cabinet fans for normal operation.

5.4 Lubrication

The tuning and loading motor and the manual power increase/decrease motor are sealed and do not require lubrication. The cabinet inlet motor and the pa cavity blower motor should be lubricated with SAE 10 oil as required.

5.5 Troubleshooting

If the transmitter fails to operate properly, check each circuit in the order that it is made operative. Use the simplified schematics in section 4 and the overall schematic in section 7 when needed. Normal control panel meter readings are provided in table 3-4 and an efficiency vs frequency graph is provided in figure 5-4.

5.5.1 Access Panel Interlock Switch

The access panel interlock switches must be blocked open to perform certain adjustment procedures. To block the panel switch open, push in on the plunger and insert two insulated blocks between the switch contactors. Remove the insulated blocks before replacing the panel.

5.5.2 Test Equipment

Table 5-1 lists the test equipment necessary to maintain the transmitter.

5.6 Adjustments

All transmitters are factory adjusted and pretuned to specific customer requirements. No adjustments are required by the customer unless a broken part is replaced, a specific assembly does not display meter readings within allowable tolerances, or the transmitter is

www.SteamPoweredRadio.com

Table 5-1. Required Test Equipment.

NAME	DESCRIPTION	MANUFACTURER AND MODEL
Volt-ohm-milliammeter		Triplett 630-N
Ac voltmeter	0 to 10 volts, 1% tol (true rms)	Weston 433
Power supply	0 to 28 volts dc, 5 amperes	
Rf wattmeter	2.5- and 25-kW elements, 50 to 125 MHz	Bird 460
Thruline wattmeter	25 watts	Bird 43
Dc voltmeter	0 to 10 kV	
Dc ammeter	0 to 5 amperes	

operated at a frequency or power output different from the frequency or power output specified in the production test data supplied with the transmitter.

WARNING

HIGH VOLTAGES are exposed when cabinet doors or access panels are opened.

DEATH ON CONTACT may occur if you are not extremely careful when you perform the following procedures.

NOTE

The 28-volt power supply is on when both the filament and plate voltages are off.

Unless otherwise indicated, the POWER CONTROL switch is set to MANUAL, the POWER switch is set to FORWARD, the AUTO RECYCLE switch is set to OFF, and all circuit breakers are set to ON during adjustment procedures.

5.6.1 Switch Adjustments

5.6.1.1 Air Interlock Switch S1

a. Press the PLATE OFF and FILAMENT ON switches on control panel A1.

b. Remove the side panel next to the plate cavity.

c. Adjust the tension bolt on switch S1 so that the green filament light goes out when the pa grid compartment door is opened approximately 1 inch.

5.6.1.2 Tuning Motor Limit Switches S11, S12, S13, and S14

a. Press the PLATE OFF and FILAMENT OFF switches on control panel A1.

b. Remove the rear panel behind the plate cavity, or the side panel next to the cavity.

c. Loosen the mounting screws on the limit switch.

www.SteamPoweredRadio.com

d. Position the limit switches so that the peg mounted to the rack gear causes the switch to trip before the peg runs into either end-stop. The tuning and loading paddles must never be closer than 5/8 inch from the blocking capacitor.

5.6.2 Filament Voltage Adjustment

a. Press the PLATE OFF and FILAMENT OFF switches on control panel A1.

b. Open the pa grid compartment and connect a 0- to 10-volt true rms ac 1 percent meter to the pa filament rings on the tube socket.

NOTE

The filament voltage regulator is an scr phase-controlled circuit. The ac voltmeter used must be a true rms indicating device.

c. Run the meter leads out the corner of the compartment and close the pa compartment door.

d. Remove the cover from the control circuits and pull the plunger on the card cage interlock all the way out.

e. Short across A5C4 and A5R16.

f. Press FILAMENT ON switch on control panel A1.

WARNING

HIGH VOLTAGES are exposed when cabinet doors or access panels are opened.

DEATH ON CONTACT may occur if you are not extremely careful when you perform the following procedures.

g. Adjust variable transformer A19T7 for an indication of 6.6 volts ac.

h. Press FILAMENT OFF switch on control panel A1.

i. Remove the jumpers across A5C4 and A5R16.

j. Press FILAMENT ON switch on control panel A1.

k. Adjust A5R4 for an indication of 6.0 volts ac.

5.6.3 Filament Voltmeter Adjustment

NOTE

This procedure should be performed only after procedure in 5.6.2 has been completed.

a. Press the PLATE OFF and FILAMENT OFF switches on control panel A1.

b. Remove the front panel beneath the grid compartment door.

www.SteamPoweredRadio.com

c. Set the TEST METER selector switch on control panel A1 to PA FIL 8V.

d. Press the FILAMENT ON switch.

e. Connect an ac voltmeter across terminals 3 and 4 of driver filament transformer A11T6 and adjust DVR FIL VOLTS ADJUST control A11R64 to produce an indication of 5.8 ±0.1 volts on the ac voltmeter.

f. Adjust FIL VM CAL control A22R36 to produce an indication of 5.8 volts on the TEST METER.

NOTE

Because the TEST METER is a peak-reading detector, its indication increases approximately 0.2 volt when the transmitter is at rated power.

5.6.4 DC Overload Adjustment

a. Press the PLATE OFF and FILAMENT OFF switches on control panel A1.

b. Remove the front panel beneath the pa grid compartment door.

c. Turn PA PLATE OVLD ADJ A22R66, PA SCREEN OVLD ADJ A22R65, and DVR (driver) PLATE OVLD ADJ A22R60 to their full ccw position.

d. Connect a milliammeter from the positive terminal of a 28-volt dc power supply to TB8-6 on the transmitter.

e. Connect the negative terminal of the dc power supply to the transmitter chassis.

f. Adjust the power supply current to 600 mA.

g. Adjust DVR OVLD ADJ A22R60 to trip relay A22K8 at this current. (The DVR PLT fault indicator on the fault tally and recycle panel lights when the relay trips).

h. Disconnect the milliammeter and remove the jumper from the dc power supply to the chassis.

i. Connect an ammeter from the positive terminal of a 28-volt dc power supply to TB8-5.

j. Connect the negative terminal of the dc power supply to TB8-7.

k. Adjust the dc power supply current to 4.5 amperes.

l. Adjust PA PLATE OVLD ADJ A22R66 to trip relay A22K6 at this current. (The PLATE fault indicator on the fault tally and recycle panel lights when the relay trips.)

m. Disconnect the ammeter and remove the jumper from the dc power supply to TB8-7.

n. Connect a milliammeter from the positive terminal of a 28-volt dc power supply to TB8-5.

o. Connect the negative terminal of the dc power supply to TB8-4.

www.SteamPoweredRadio.com

p. Adjust the power supply current to 900 mA.

q. Adjust PA SCREEN OVLD ADJ A22R65 to trip relay A22K7 at this current. (The SCREEN fault indicator on the fault tally and recycle panel lights when the relay trips.)

r. Disconnect the milliammeter and remove the jumper from the dc power supply to TB8-4.

s. Press the FAULT RESET switch on control panel A1.

5.6.5 PA Grid Current and Driver Screen Current Meter Calibration

a. Press PLATE OFF and FILAMENT OFF switches on control panel A1.

b. Remove the front panel beneath the pa grid compartment door.

c. Connect the negative terminal of a 28-volt dc power supply to A22TB8-20 and the positive terminal to A22TB8-19.

d. Adjust the dc power supply current to 80 mA (831G-2) or 400 mA (831G-2B).

e. Set the TEST METER selector switch to PA GRID 80 MA (831G-2) or 400 MA (831G-2B).

f. Adjust PA GRID MTRG CAL control A22R72 for an 80-mA (831G-2) or a 400 mA (831G-2B) reading on the test meter.

g. Remove the dc power supply test leads.

h. Attach the positive terminal of the dc power supply to A22TB8-11 and the negative terminal to A22TB8-21.

i. Set the TEST METER selector switch to DVR SCREEN 80 MA.

j. Adjust the DVR SCREEN MTRG CAL control A22R73 for an 80-mA driver screen current reading on the TEST METER.

k. Remove the dc power supply test leads.

5.6.6 High-Voltage Power Supply Adjustments

WARNING

HIGH VOLTAGES are exposed when cabinet doors or access panels are opened.

DEATH ON CONTACT may occur if you are not extremely careful when you perform the following procedures.

a. Remove the lower front panel below the exciter and block open the interlock switch.

www.SteamPoweredRadio.com

b. Press the FILAMENT ON and PLATE ON switches on control panel A1.

c. Raise or lower the POWER ADJUST control until approximately 8000 volts is indicated on the PLATE VOLTAGE meter.

d. Set TEST METER select switch to PA SCREEN 800 V. Observe that approximately 750 volts is indicated on the TEST METER.

e. Set TEST METER select switch to DVR SCREEN 400 V. Observe that 290 ±10 volts is indicated on the TEST METER.

f. Set the TEST METER selector switch to the LEFT DVR K 400 MA position.

g. Adjust the LEFT BIAS control on the driver box A11 until the TEST METER indicates 125 mA.

h. Set the TEST METER selector switch to the RIGHT DVR K 400 MA position.

i. Adjust the RIGHT BIAS control on driver box A11 until the TEST METER indicates 125 mA.

NOTE

The two bias controls interact and should be adjusted several times to acquire a constant 125 mA in both tubes.

j. Set TEST METER select switch to DVR PLATE 4000 V. Observe that 1800 to 2000 volts is indicated on the TEST METER.

k. Press the PLATE OFF and FILAMENT OFF switches on control panel A1.

l. Replace all panels and close all compartment doors.

5.6.7 RF Tuning Procedure

NOTE

Major rf tuning is required only when components in the rf circuit are replaced or when the operating frequency is changed. Refer to the initial turn-on procedures (paragraph 2.5) for minor tuning instructions.

The following paragraphs provide procedures for major rf tuning of the transmitter. If the operating frequency is the same as the frequency specified in the production test data supplied with the transmitter, perform the procedures in paragraphs 5.6.7.3 through 5.6.7.6. If the operating frequency is different from the frequency specified in the production test data supplied with the transmitter, perform the procedures in paragraphs 5.6.7.1 through 5.6.7.6.

5.6.7.1 Shorting Plane, Driver Loading Slider, Driver Tuning Slider, Driver Grid Slider, and PA Neutralization Preliminary Adjustments

NOTE

These adjustments are not necessary if the related components have not been replaced and the operating frequency is the same as the frequency specified in the production test data supplied with the transmitter.

www.SteamPoweredRadio.com

a. Press the PLATE OFF and FILAMENT OFF switches on control panel A1.

b. Open the plate cavity and grid compartment doors.

c. Adjust the plate cavity shorting plane (figure 4-2) to the desired frequency in accordance with the graph in figure 5-1.

d. Adjust driver loading slider A21L8, driver tuning slider A21L7, and driver grid slider A11L9 to the desired frequency in accordance with the graph in figure 5-2.

e. Adjust the pa neutralization bar to the desired frequency in accordance with the graph in figure 5-3.

f. Remove the panel located beneath the exciter.

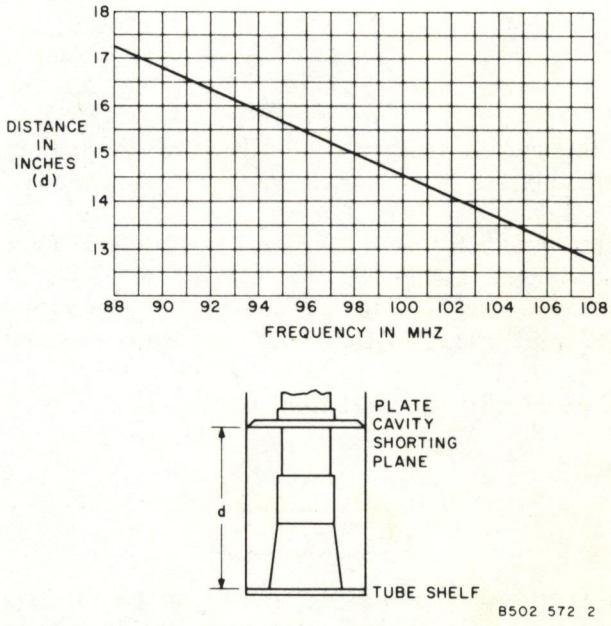

Figure 5-1. PA Plate Cavity Shorting Plane Approximate Adjustment.

WARNING

HIGH VOLTAGES are exposed when cabinet doors or access panels are opened.

DEATH ON CONTACT may occur if you are not extremely careful when you perform the following procedures.

g. Discharge all large capacitors.

h. Remove the driver box access panel.

www.SteamPoweredRadio.com

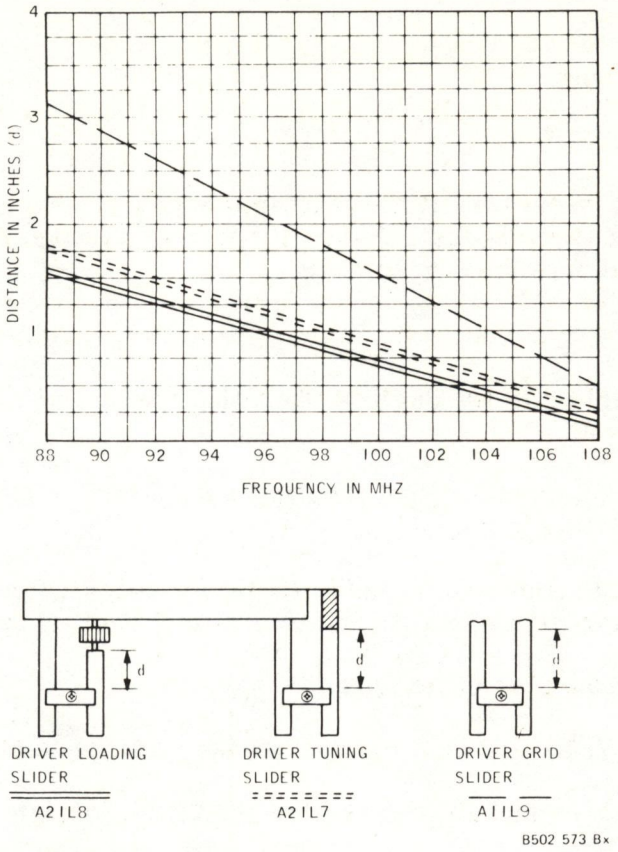

Figure 5-2. Graph for Approximate Setting of Driver Loading, Driver Tuning, and Driver Grid Sliders.

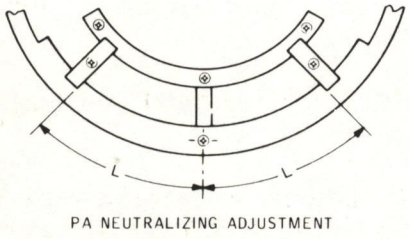

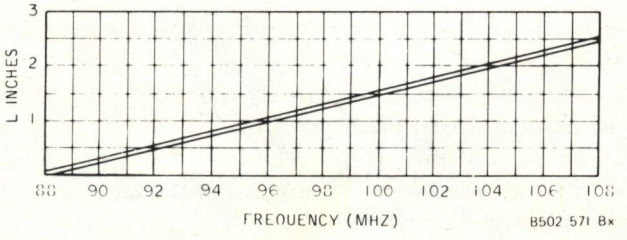

Figure 5-3. PA Neutralizing Adjustment.

www.SteamPoweredRadio.com

i. Adjust driver grid slider A11L9 to the desired frequency in accordance with the graph in figure 5-2.

5.6.7.2 Driver Grid Tuning

NOTE

This procedure is not necessary if the related components have not been replaced and the operating frequency is the same as the frequency specified in the production test data supplied with the transmitter.

a. Perform the preliminary adjustments in paragraph 5.6.7.1 before proceeding.

b. Tuning the 310Z-2 exciter to the desired operating frequency. Refer to the 310Z-2 exciter instruction book.

c. On top of the driver box mount a Bird thruline wattmeter, model 43, that contains a 25-watt, 50- to 125-MHz element.

d. Use short lengths of 50-ohm coaxial cable (RG-223 or equivalent) to connect the wattmeter between driver rf input jack J1 and the 310Z-2 exciter output jack.

e. Block the interlock grounding switch open.

f. Set PA SCREEN POWER SUPPLY circuit breaker A6CB4 to OFF.

g. Remove the exciter cover and set the exciter POWER switch to ON.

h. Press the FILAMENT ON and PLATE ON switches.

WARNING

HIGH VOLTAGES are exposed when cabinet doors or access panels are opened.

DEATH ON CONTACT may occur if you are not extremely careful when you perform the following procedures.

i. Adjust exciter POWER OUTPUT control A4R15 cw until 15-watt forward power is indicated on the Bird wattmeter.

j. Turn the wattmeter element to indicate reflected power and adjust TUNE and COUPLE capacitors A11C33 and A11C34 on the driver box for minimum reflected power.

NOTE

Reflected power should be less then 1/2 watt when the forward power is 15 watts.

k. Check that the TUNE and COUPLE capacitors are approximately one-half mesh when they are adjusted for minimum reflected power.

l. If either control is not approximately midrange, remove power from the transmitter, adjust A11L9, and repeat steps h. through k.

m. Replace all panels and close all compartment doors.

www.SteamPoweredRadio.com

5.6.7.3 PA Tuning

a. Press the PLATE OFF and FILAMENT OFF switches on control panel A1.

b. If possible, connect the transmitter to an rf wattmeter/dummy load combination or a calorimeter capable of measuring and dissipating 25 kilowatts at 50 to 125 MHz. If these devices are unavailable, refer to the RF WATTMETER on the control panel for power output measurement.

CAUTION

Do not perform the remainder of this procedure if the transmitter is not connected to an antenna with a 50-ohm impedance or a dummy load capable of dissipating at least 25 kilowatts.

c. Turn the DRIVER PLATE TUNING control fully clockwise. Then, turn the control six turns counterclockwise (30 percent from minimum capacity).

d. Open the plate cavity access door and observe pa tuning and loading capacitors A18C51 and A18C50. (See figure 4-2.) Adjust the PA TUNING and PA LOADING controls on the control panel until the two capacitors are positioned approximately midrange. Close the plate cavity door.

e. Open the tube socket access door located beneath the DRIVER PLATE TUNING control.

f. Turn filament peaking capacitor A21C39 to near minimum capacity.

g. Set PA SCREEN circuit breaker to OFF. Ascertain that the exciter POWER switch is ON.

CAUTION

Do not exceed the following maximum ratings:

Left driver cathode current	250 mA
Right driver cathode current	250 mA
Pa screen current	600 mA
Pa plate current	4.0 amperes

h. Press the FILAMENT ON and PLATE ON switches on control panel A1.

CAUTION

Prolonged operation with the plate poorly tuned may damage the power amplifier.

i. If an rf output from the transmitter is indicated when power is applied, quickly adjust the PA TUNING and PA LOADING controls for a maximum output power indication.

j. If an rf output is not present when power is applied, adjust the DRIVER PLATE TUNING control until an output is indicated.

k. Repeat steps i. and j. until maximum output power is obtained. If the PA TUNING control encounters an end-stop while in the LOWER position, lower the shorting plane and

www.SteamPoweredRadio.com

retune. If an end-stop is encountered in the RAISE position, raise the shorting plane and retune.

l. Adjust the exciter output to produce 5 to 10 mA of grid current.

m. Check for pa neutralization. Refer to paragraph 5.6.7.5.

n. Check driver neutralization. Refer to paragraph 5.6.7.4.

NOTE

Because of the relatively high output capacity of the 4CX15000A and the resulting low cavity inductance, no plate current dip will be noted at higher power levels. Tuning and loading should be adjusted in steps for maximum output power.

o. Press the PLATE OFF and FILAMENT OFF switches on control panel A1.

p. Open the pa cavity door and ensure that plate tuning capacitor A18C50 is approximately halfway between its limits.

q. If plate tuning capacitor A18C50 is not approximately halfway between its limits, adjust the pa plate cavity shorting plane (paragraph 5.6.7.1) and repeat steps c. through p. of this paragraph.

r. Remove the rear access panel behind the plate cavity.

s. Remove the access panel directly below the exciter. Block open the interlock switch.

t. Press the FILAMENT ON and PLATE ON switches on the control panel.

WARNING

HIGH VOLTAGES are exposed when cabinet doors or access panels are opened.

DEATH ON CONTACT may occur if you are not extremely careful when you perform the following procedures.

u. Using an insulated screwdriver, adjust PA BIAS ADJ resistor A18R35 for proper output currents. The PA grid drive level determines the amount of bias required, and with higher drive levels an increase in bias results in greater amplifier efficiency. Compare the efficiency with the efficiency graph in figure 5-4.

NOTE

Efficiency is calculated using the following formula:

$$\text{Efficiency} = \frac{\text{Power Output (watts)}}{\text{Plate Voltage x Plate Current}}$$

v. Adjust L DVR BIAS ADJ control A11R40, and R DVR BIAS ADJ control A11R44 until the pa is saturated. (LEFT DVR K 400 MA and RIGHT DVR K 400 MA test meter (M1) indications are not to exceed 250 mA.)

w. Adjust the power output as described in paragraph 5.6.7.6.

If You Didn't Get This From My Site,
Then It Was Stolen From....
www.SteamPoweredRadio.com

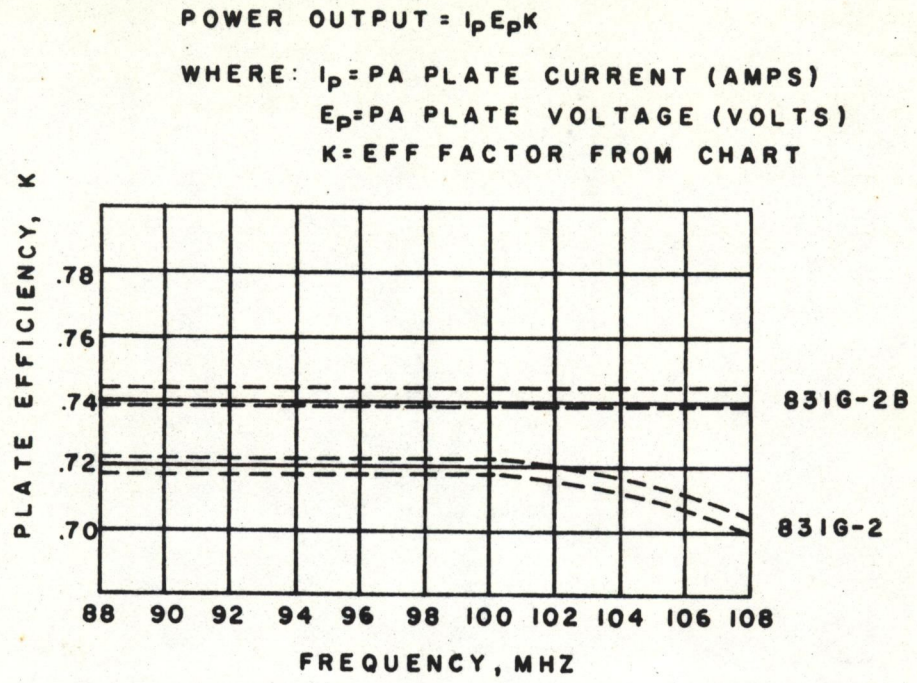

Figure 5-4A. 831G-2/831G-2B Amplifier Efficiency Vs Frequency.

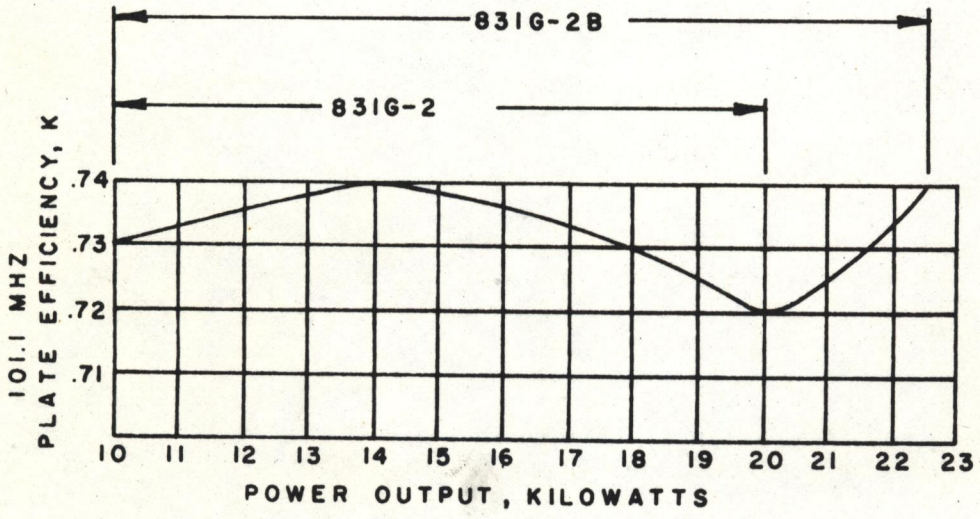

Figure 5-4B. 831G-2/831G-2B Amplifier Efficiency Vs Power Level.

www.SteamPoweredRadio.com

5.6.7.4 Driver Neutralization

a. Check for proper driver neutralization by adjusting the tuning of the transmitter and noting that the DVR SCREEN current peak is coincident with the peak of PA GRID current, and a dip of DVR K current. If neutralization is correct, do not perform the remainder of this procedure.

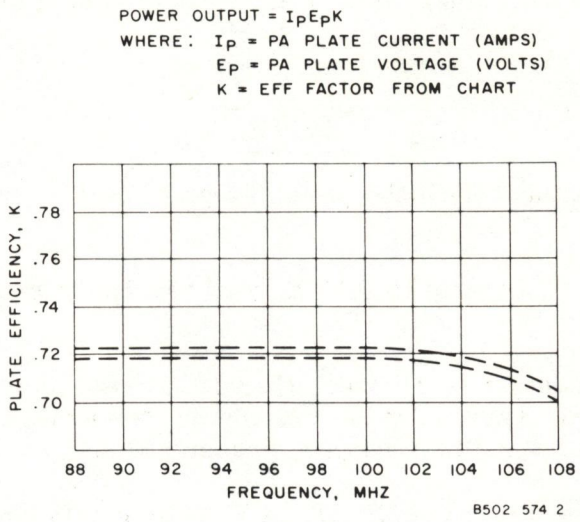

Figure 5-4. 831G-2/831G-2B Amplifier Efficiency Vs Frequency Graph.

b. Press the PLATE OFF and FILAMENT OFF switches on control panel A1.

c. Open the tube socket access door directly beneath the DRIVER PLATE TUNING control.

d. Slightly adjust the paddle, C_N, attached to capacitor A11C35.

e. Close the access door and recheck the driver neutralization.

f. Repeat steps b. through e. until proper neutralization is obtained.

5.6.7.5 Neutralization

a. Check the transmitter for proper neutralization by tuning the transmitter for a pa screen current peak and observing that maximum output power occurs at the same time. If neutralization is correct, do not perform the remainder of this procedure.

NOTE

A minimum value of a pa plate current also occurs when neutralization is correct.

b. Press the PLATE OFF and FILAMENT OFF switches on control panel A1.

c. Open the pa cavity door. Short all high voltage terminals with grounding stick.

www.SteamPoweredRadio.com

d. Slide the blocking capacitor and the tube anode cover up to expose screen sliders.

e. Refer to figure 5-3 and adjust the screen sliders, LN1 and LN2. The sliders should not require an adjustment greater than ±1/4 inch from the initial setting. (A setting on the plus side is preferred.)

f. Slide the blocking capacitor and tube anode cover back into place.

g. Close the cavity door and apply power to the transmitter.

h. Check for proper neutralization again. If incorrect, repeat steps b. through g.

5.6.7.6 Maximum Power Output Adjustment

NOTE

Do not make this adjustment until the pa tuning procedure in paragraph 5.6.7.3 is accomplished.

a. Set the POWER ADJUST control to RAISE until maximum power output is displayed on the RF WATTMETER.

b. If the maximum power output is not more than 10 percent above the authorized station maximum output, skip to step h. If the maximum power output is more than 10 percent of the authorized station maximum output, proceed to step c.

c. Press the PLATE OFF and FILAMENT OFF switches on control panel A1.

d. Turn off primary power to the transmitter.

e. Refer to table 2-1. Change wires A, B, and C to the terminals for the next higher line voltage connection. (Example: If the wires are originally connected for a line voltage of 240 volts, reconnect the wires for a line voltage of 250 volts.)

f. Reapply primary power and press the FILAMENT ON and PLATE ON switches on control panel A1.

g. Repeat steps b. through f. until the maximum transmitter output is not more than 10 percent above the authorized station maximum output.

h. Compare the PLATE VOLTAGE reading with the plate voltage listed in table 3-4 for the authorized station maximum power output. (Linear interpolation of tabulated values may be necessary.) If the compared voltages differ by more than 10 percent, proceed to step i. If the compared voltages differ by less than 10 percent, skip to step m.

i. Press the PLATE OFF and FILAMENT OFF switches on control panel A1.

j. Turn off primary power to the transmitter.

NOTE

Additional power control is achieved by changing the pa loading.

www.SteamPoweredRadio.com

k. Refer to table 2-1. If the transmitter plate voltage exceeds the tabulated voltage, change wires AA, BB, and CC on transformer T3 to the terminals listed for the next higher line voltage. If the tabulated voltage exceeds the transmitter plate voltage, change wires AA, BB, and CC on transformer T3 to ther terminals listed for the next lower line voltage.

l. Repeat steps h. through k. until the transmitter and the tabulated plate voltages differ by less than 10 percent.

m. Adjust the POWER ADJUST control until the RF WATTMETER displays the authorized station maximum power output.

n. Refer to figure 5-5. Check the forward and reflected power levels and determine the vswr. If the vswr exceeds 2:1, check the antenna impedance.

NOTE

The vswr on a properly tuned antenna is 1.1:1, or less.

5.6.8 Board A3, Offset Zero Adjustment

a. Press the PLATE OFF and FILAMENT OFF switches on control panel A1.

b. Remove cover from the control circuits and pull the plunger on the card cage interlock all the way out.

c. Set the exciter POWER switch to off.

d. Place board A3 on a card extender.

e. Press the FILAMENT ON and PLATE ON switches.

f. Connect a dc voltmeter from A3AR1 pin 6 and ground. Set TRIP DISABLE switch to OFF.

g. Adjust OFFSET REFL control A3R11 until 0 volt is indicated on the dc voltmeter.

h. Remove the dc voltmeter from A3AR1 pin 6 and connect it to A3AR2 pin 6.

i. Adjust FWD OFFSET control A3R19 until 0 volt is indicated on the dc voltmeter.

j. Press the PLATE OFF and FILAMENT OFF switches.

k. Replace board A3 in its proper place. Replace cover on the control circuits.

5.6.9 Automatic Power Control Adjustment

a. Set the POWER CONTROL switch to AUTOMATIC.

b. Remove the panel covering the control circuits and disable the interlock switch.

c. Press the FILAMENTS ON and PLATE ON switches on control panel A1.

www.SteamPoweredRadio.com

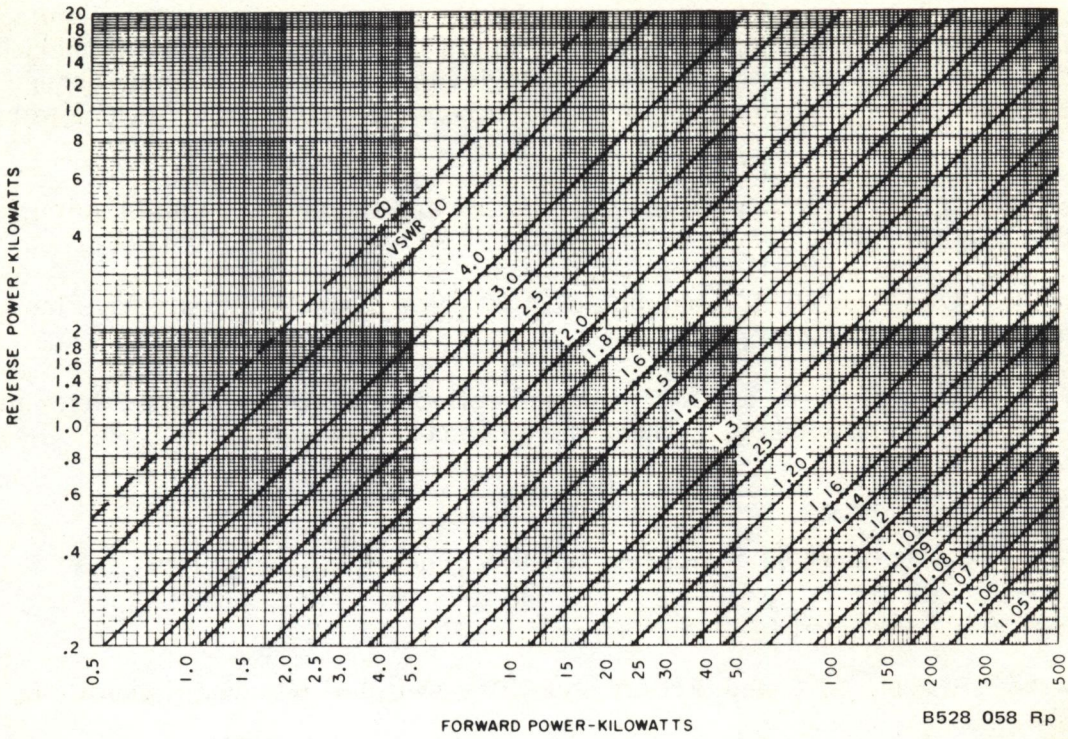

Figure 5-5. Power to V SWR Conversion Graph.

d. Adjust POWER CONTROL ADJ A3R24 until the authorized station output is displayed on the RF WATTMETER.

WARNING

HIGH VOLTAGES are exposed when cabinet doors or access panels are opened.

DEATH ON CONTACT may occur if you are not extremely careful when you perform the following procedures.

e. Adjust CATHODE TUNE capacitor A21C39 until minimum plate current is displayed on the PLATE CURRENT meter. (Power output should remain near maximum.)

f. Replace all panels and close all compartment doors.

5.6.10 VSWR Trip

a. Press the FILAMENT ON and PLATE ON switches on control panel A1.

b. Place the POWER CONTROL switch in the MANUAL position.

c. With the POWER ADJUST control, lower the maximum output power to 2000 watts (821G-2) or 2250 watts (831G-2B).

d. Press the PLATE OFF and FILAMENT OFF switches on control panel A1.

e. Carefully loosen the base clamps on directional coupler A16 and reverse the assembly.

www.SteamPoweredRadio.com

f. Remove cover from the control circuits and pull out the plunger on the card cage interlock.

g. Set the TRIP DISABLE switch on A3 to ON and the AUTO RECYCLE switch on A24 to OFF.

h. Press the FILAMENT ON and PLATE ON switches on control panel A1.

i. Adjust TRIP LEV A3R23 until vswr trip relay A22K9 is energized and plate voltage is removed. (The VSWR fault indicator on A24 will light.)

j. Set the TRIP DISABLE switch to OFF and press the PLATE ON switch.

k. Set the TRIP DISABLE switch to ON. If the transmitter fails to turn off, repeat steps a. through j.

l. Press the FILAMENT OFF switch and the FAULT RESET switch. Set AUTO RECYCLE switch to ON.

m. Replace the directional coupler in its normal position.

n. Adjust the transmitter power output to authorized station power output with the POWER ADJUST control.

5.7 Parts Replacement

5.7.1 4CX15000A PA Tube

a. Slide the blocking capacitor and the anode cover up (figure 4-2) (also the cavity slides if the operating frequency is at the higher end of the fm band) to expose the tube.

b. Remove the anode lead.

c. Carefully lift the tube out of its socket.

d. Reverse the procedure to replace the tube.

5.7.2 Control Panel Indicator Lamps

a. Pull the switch out and rotate it 90° ccw; the lamp assembly should pop out.

b. Remove the defective lamp by pressing down on the bulb.

c. Reinsert new bulb and replace the assembly.

5.7.3 Fuses

Fuses F15, F16, and F17 are current-limiting type fuses that protect the scr's on power control unit A9. When one of these fuses blows, the links in the remaining two may have been weakened, and as a result, their ratings may have been changed to a lower value. For this reason, all three fuses should be replaced when one is blown.

www.SteamPoweredRadio.com

5.7.4 Replacement Parts

Order replacement parts from the following address:

Collins Radio Group
Rockwell International
Service Parts, 412-126
Richardson, Texas 75080

www.SteamPoweredRadio.com

6.1 General

This section contains a list of all repairable/replaceable electrical, electronic, and critical mechanical parts for the 831G-2 20-kW and 831G-2B 22.5-kW FM Transmitters.

6.2 Symbol

This column contains the electrical symbols of all parts that have been assigned to schematics on wiring diagrams, and/or index numbers for all parts for which symbols have not been assigned. When a symbol, within a series of symbols, has not been assigned a part number, the unassigned symbol will be reflected as "NOT USED" in the DESCRIPTION column.

6.3 Description

This column contains the identifying noun or item name followed by a brief description. The description for electrical/electronic parts includes the applicable ratings and tolerances. For consecutively listed identical parts within an assembly, "SAME AS ---" is reflected in the description of subsequent listings, referencing to the first listing within the assembly.

6.4 Manufacturers Part Number

The part number for each item not manufactured by Collins Radio is reflected in the column.

6.5 MFR Code

The manufacturers codes, in accordance with Federal Supply Codes for Manufacturers Handbook H4-1, are reflected in this column. Manufacturers not listed in Handbook H4-1 are assigned a 5-letter code. This column is left blank for items manufactured by Collins Radio. Refer to paragraph 6.9, Manufacturers Code and Name Index.

6.6 Collins Part Number

The Collins Radio Specification or drawing number, for each item in the parts list, is reflected in this column.

6.7 Illustrations

All parts listed in the SYMBOL column are located on corresponding illustrations. The illustration always precedes the parts list. When a replaceable electrical item is hidden from view by structural parts or wiring, a dotted leader line is used to show the location of the item on the illustration.

www.SteamPoweredRadio.com

6.8 List of Equipment

	Page
831G-2 20-kW/831G-2B 22.5-kW FM Transmitter	6-7
Control Panel, A1	6-13
Remote Control Assembly, A2	6-17
IC Board, A3	6-19
Filament Regulator, A5	6-22
Circuit Breaker Panel, A6	6-24
Tuning/Power Control Relay Board, A7	6-26
Power Control Regulator, A8	6-28
Power Control Panel, A9	6-30
2-kV Power Supply, A10	6-32
RF Driver Assembly, A11	6-34
Remote Control Latching Relay Board, A12	6-38
RF Output Low-Pass Filter, A13	6-40
Power Supply Filter, A14	6-42
Metering Multiplier Board, A15	6-46
Direction Coupler, A16	6-48
Bleeder Resistor Panel, A17	6-50
Power Amplifier Cavity, A18	6-52
Input Terminal Panel, A19	6-58
Card Cage Assembly, A20	6-60
Power Amplifier Socket, A21	6-62
Overload and Meter Calibrate Panel, A22	6-64
Fault Tally and Automatic Recycle Panel, A24	6-67
Fault Tally Card, A24A1	6-69
Auto Recycle Card, A24A2	6-71
28-Volt Power Supply, PS1	6-73
PA Bias Power Supply, PS2	6-75

6.9 Manufacturers Code and Index

CODE	NAME AND ADDRESS
ASSOC	Associated Electrical Ind. Eugene Munsell, Distributor Box 126 Ho Ho Kus, NJ 07423
POWER	Power Semiconductors, Inc. Munson St. Devon, CT 06460
00141	Pic Design Corp. 477 Atlantic Ave. East Rockaway, NY 11518
00779	Amp, Inc. PO Box 3608 Harrisburg, PS 17105
01002	General Electric Co. Industrial and Power Capacitor Dept. John St. Hudson Falls, NY 12839
01295	Texas Instruments, Inc. Semiconductor and Components Div. 13500 N Central Expwy. Dallas, TX 75231
03508	General Electric Co. Semiconductor Products Dept. Electronics Park Syracuse, NY 13201
03877	Transitron Electronic Corp. 168-186 Albion St. Wakefield, MA 01880

www.SteamPoweredRadio.com

CODE	NAME AND ADDRESS
04009	Arrow-Hart and Hegeman Electric Co. 103 Hawthorne St. Hartford, CT 06106
04713	Motorola Semiconductor Products, Inc. 5005 E McDowell Rd. Phoenix, AZ 85008
05277	Westinghouse Electric Corp. Semiconductor Dept. Youngwood, PA 15697
06751	Components, Inc. Semcor Div. Phoenix, AZ
06978	Aladdin Electronics Div. of Aladdin Industries, Inc. 705 Murfreesboro Rd. Nashville, TN 37210
06980	Varian Eimac Div. 301 Industrial Way San Carlos, CA 94070
07263	Fairchild Camera and Instrument Corp. Semiconductor Div. 464 Ellis St. Mountain View, CA 94040
07688	Military Standards
07716	IRC, Div. of TRW, Inc. Burlington Plant 2850 Mt. Pleasant Burlington, IA 52601
08289	Blinn Delbert Co., Inc. 1678 E Fifth Ave. PO Box 2007 Pomona, CA 91766
08466	General Instrument of Canada, Ltd. 151 Weber South Waterloo, Ontario, Canada
08484	Breeze Corporations, Inc. 700 Liberty Ave. Union, NJ 07083
08510	Magnetics, Inc. Kemco Div. Sandy Lake, PA 16145
09023	Cornell-Dubilier Electronics Div. Federal Pacific Electric Co. 2562 Dalrymple Sanford, NC 27330
09214	General Electric Co. Semiconductor Products Dept. West Genesee St. Auburn, NY 31022
10108	Hurst Mfg. Corp. Road 64 East Princeton, IN 47570
10646	Carborundum Co. PO Box 337 Niagara Falls, NY 14302
11502	IRC, Div. of TRW, Inc. Boone Plant Greenway Rd. Boone, NC 28607
12066	Ohio Semitronics, Inc. 1205 Chesapeake Ave. Columbus, OH 43212
13103	Thermalloy Co. 8717 Diplomacy Row Dallas, TX 75247
14433	ITT Semiconductors Div. of International Telephone and Telegraph Corp. 3301 Electronics Way West Palm Beach, FL 33401
16546	US Capacitor Corp. 2151 N Lincoln Burbank, CA 91504
17117	Electronic Molding Co. 96 Mill St. Woonsocket, RI 02895
18100	Hill Magnetics, Inc. 2201 Bay Rd. Redwood City, CA 94063

www.SteamPoweredRadio.com

CODE	NAME AND ADDRESS
19070	Eastern Air Devices, Inc. 385 Central Avenue Dover, NH 38022
19701	Electra/Midland Corp. PO Box 760 Mineral Wells, TX 76067
33173	General Electric Co. Tube Dept. 316 E Ninth St. Owensboro, KY 42301
33954	Vectrol, Inc. 1010 Westmore Ave. Rockville, MD 20850
35844	Andrew Antenna Corp, Ltd. 606 Beech St. Whitby, Ontario, Canada
37942	P.R. Mallory and Co., Inc. 3029 E Washington St. Indianapolis, IN 46206
41197	Modine Mfg. Co. 1500 Dekoven Ave. Racine, WI 53401
44655	Ohmite Mfg. Co. 3601 W Howard St. Skokie, IL 60076
49671	RCA Corp. 30 Rockefeller Plaza New York, NY 10020
52090	Rowan Controller Co. PO Box 306 Westminster, MD 21157
53021	Sangamo Electric Co. 1301 N 11th Springfield, IL 62705
56289	Sprague Electric Co. North Adams, MA 01247
56365	Square D Co. Executive Plaza Park Ridge, IL 60068
58474	Superior Electric Co. 383 Middle St. Bristol, CT 06010
59730	Thomas and Betts Co. 36 Butler St. Elizabeth, NJ 07207
60399	Torrington Mfg. Co. 100 Franklin Dr. Torrington, CT 06790
65092	Weston Instruments, Inc. Weston Instruments Div. 614 Frelinghuysen Ave. Newark, NJ 07114
70309	Allied Control Co., Inc. 2 East End Ave. New York, NY 10021
70371	American Lava Corp. Cherokee Vlvd. and Manufacturers Road Chattanooga, TN 37405
70674	ADC Products Div. of Magnetic Controls Co. 6405 Cambridge St. Minneapolis, MN 55426
71400	Bussman Mfg. Div. of McGraw & Edison Co. 2536 W University St. St. Louis, MO 63017
71424	Chase Shawmut Co. 374 Merrimac St. Newburyport, MA 01950
71450	CTS Corp. 1142 W Beardsley Ave. Elkhart, IN 46514
71590	Globe-Union, Inc. Centralab Div. PO Box 591 Milwaukee, WI 53201

If You Didn't Get This From My Site,
Then It Was Stolen From....
www.SteamPoweredRadio.com

CODE	NAME AND ADDRESS
71785	Cinch Mfg. Co. Howard B. Jones Div. 1026 S Homan Ave. Chicago, IL 60624
72136	Electro Motive Mfg. Co., Inc. South Park and John St. Willimantic, CT 06226
72699	General Instrument Corp. Automatic Manufacturing Div. 65 Gouverneur St. Newark, NJ 07104
72962	Elastic Stop Nut Div. of Amerace Esna Corp. 2330 Vauxhall Rd. Union, NJ 07083
72982	Erie Technological Products, Inc. 644 W 12th St. Erie, PA 16512
73445	Amperex Electronic Corp. 230 Duffy Ave. Hicksville, Long Island, NY 11801
74193	Heinemann Electric Co. 2612 Brunswick Pike Trenton, NJ 08602
74545	Harvey Hubbell, Inc. State St. and Bostwick Ave. Bridgeport, CT 06602
75042	IRC, Div. of TRW, Inc. 401 N Broad St. Philadelphia, PA 19108
75382	Kulka Electronic Corp. 520 S Fulton Ave. Mt. Vernon, NY 10550
76487	James Millen Mfg. Co., Inc. 150 Exchange St. Malden, MA 02148
76854	Oak Mfg. Co. Div. of Oak Electro/Netics Corp. S Main Crystal Lake, IL 60014

CODE	NAME AND ADDRESS
77342	American Machine and Foundry Co. Potter and Brumfield Div. 1200 E Broadway PO Box 522 Princeton, IN 47570
78277	Sigma Instruments, Inc. 170 Pearl St. South Braintree, MA 02185
79136	Waldes Kohinoor, Inc. 47-17 Austel Place Long Island, City, NY 11101
80008	Electro Engineering Work, Inc. 6555 Covey Rd. PO Box 338 Forestville, CA 95436
80058	Military Standards
80089	Essex Wire Corp. Controls Div. 131 Godfrey St. Logansport, IN 46947
80223	United Transformer Co. Div. of TRW, Inc. 150 Varick St. New York, NY 10013
80583	Hammarlund Mfg. Co. 73-88 Hammarlund Dr. Mars Hill, NC 28754
81349	Military Standards
81350	Military Standards
81483	International Rectifier Corp. 233 Kansas St. El Segundo, CA 90245
82142	Airco Speer Electronics Div. of Air Reduction Co., Inc. Nogales, AZ 85621
82227	A.W. Haydon 232 N Elm St. Waterbury, CT 06720

www.SteamPoweredRadio.com

CODE	NAME AND ADDRESS
82386	Sun Electric Corp. 6321 Avondale Ave. Chicago, IL 60631
82877	Rotron, Inc. 7-9 Hasbrouck Lane Woodstock, NY 12498
83330	Herman H. Smith, Inc. 812 Snediker Ave. Brooklyn, NY 11207
83781	National Electronics, Inc. PO Box 269 Geneva, IL 60134
84147	Andrew Corp. 10500 W 153rd St. Oland Park, IL 60462
86151	Genisco Technology Corp. Illinois Div. 9367 William St. Rosemon, IL 60018
87216	Philco-Ford Corp. Lansdale Div. Church Rd. Lansdale, PA 19446
88422	General Electric Co. General Purpose Motor Dept. 2000 Taylor St. Fort Wayne, IN 46804
88797	Robintech, Inc. Electro Mechanical Div. PO Box 714 Ginghamton, NY 13902
90634	Gulton Industries, Inc. Gulton St. Metuchen, NJ 08840
91637	Dale Electronics, Inc. PO Box 609 Columbus, NB 68601
91662	Elco Corp. Maryland Rd. and Computer Ave. Willow Grove, PA 19090

CODE	NAME AND ADDRESS
91929	Honeywell, Inc. Micro Switch Div. Chicago and Spring St. Freeport, IL 61032
93790	Cornell-Dubilier Electronics Div. Federal Pacific Electric Co. 1605 Rodney French Blvd. New Bedford, MA 02741
94154	Wagner Electric Corp. Tung Sol Div. 630 W Mount Pleasant Ave. Livingston, NJ 07039
94375	Automatic Metal Products Corp. 315-323 Berry St. Brooklyn, NY 11211
96095	Aerovox Corp. Sneeca Ave. Olean, NY 14760
96182	Master Specialities Co. 1640 Monrovia Costa Mesa, CA 92627
96502	Henry G. Dietz Co., Inc. 14-26 28th Ave. Long Island City, NY 11102
96906	Military Standards
98978	International Electronic Research Corp. 135 W Magnolia Ave. Burbank, CA 91502
99934	Renbrandt, Inc. 6 Parmelee St. Boston, MA 02118
99942	Globe-Union, Inc. Centralab Semiconductor Div. 4501 N Arden Drive El Monte, CA 91734
99971	General Electric Co. Aerospace Electronics Dept. French Rd. Utica, NY 13503

www.SteamPoweredRadio.com

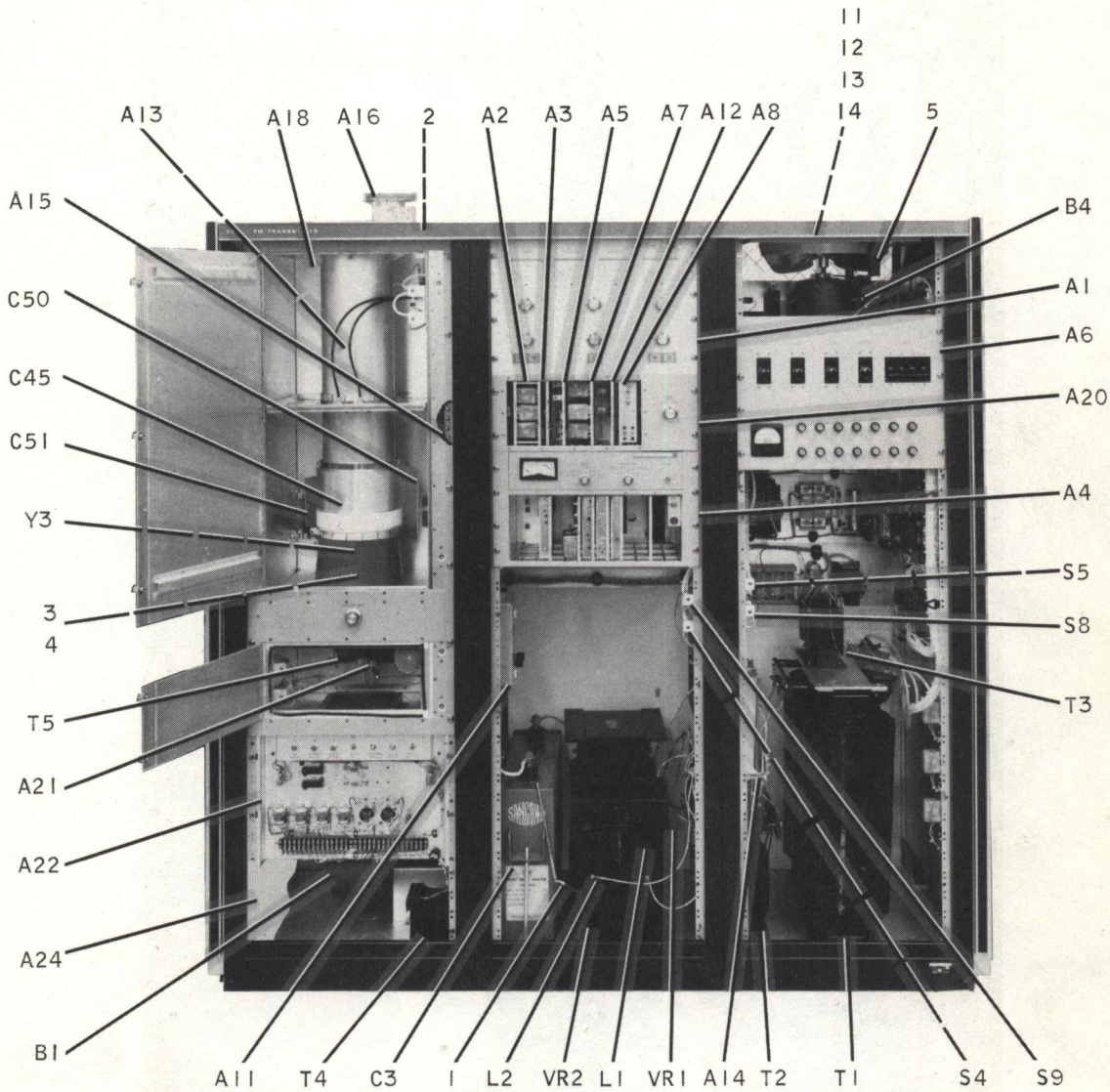

MW200-0002-Pb

Figure 6-1. 831G-2 20-kW/831G-2B 22.5-kW FM Transmitter (Sheet 1 of 3).

www.SteamPoweredRadio.com

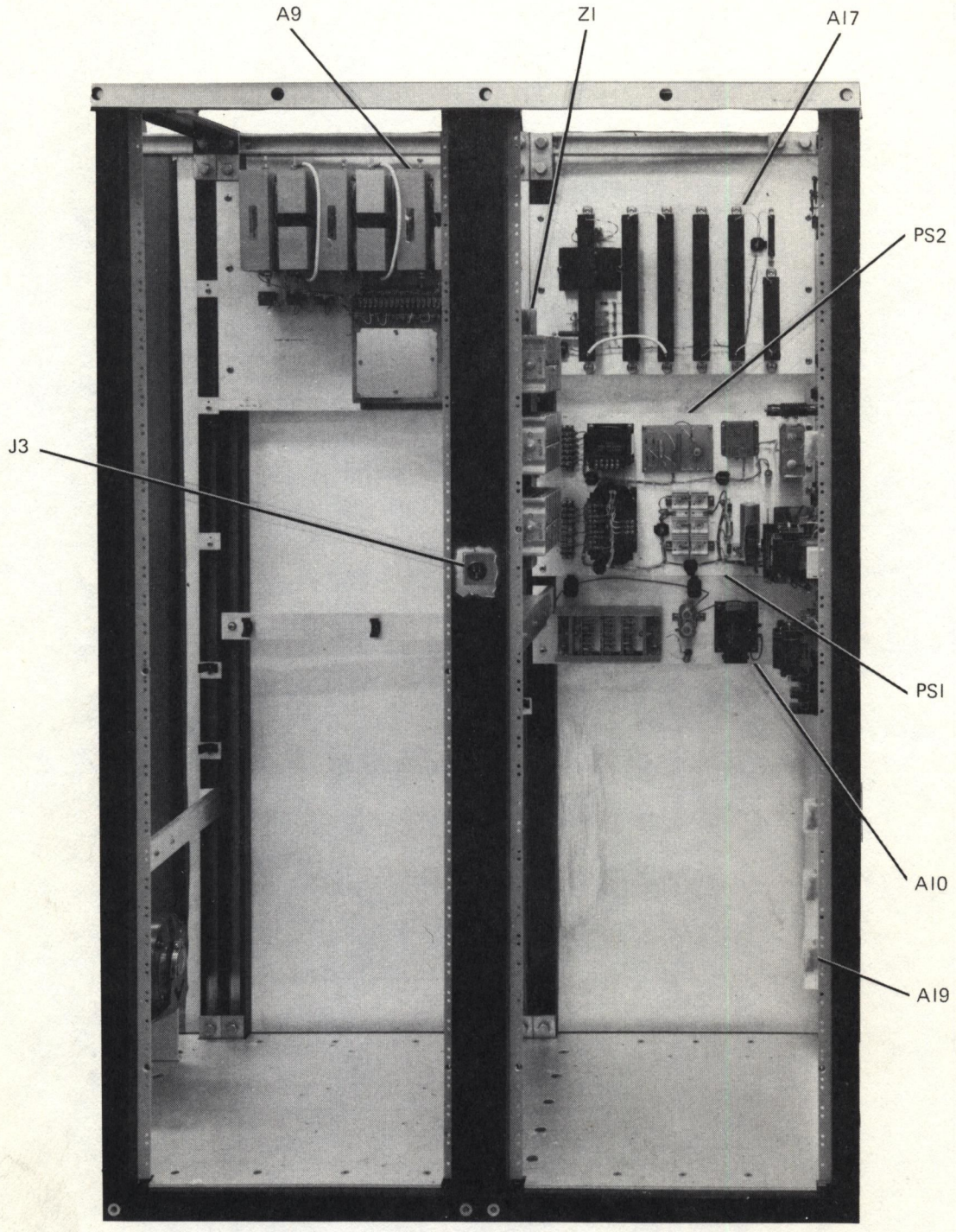

Figure 6-1. 831G-2 20-kW/831G-2B 22.5-kW FM Transmitter (Sheet 2 of 3).

www.SteamPoweredRadio.com

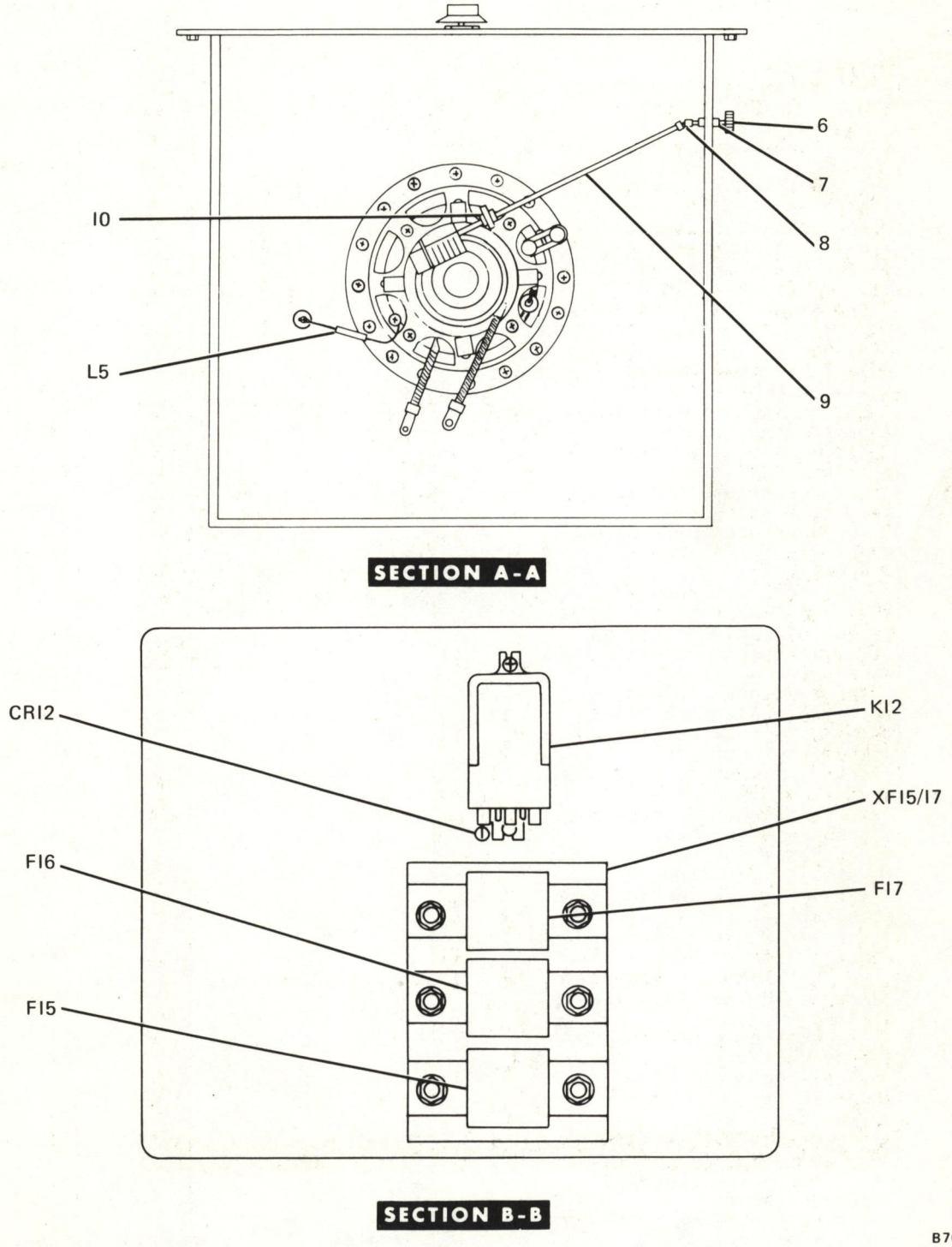

Figure 6-1. 831G-2 20-kW/831G-2B 22.5-kW FM Transmitter (Sheet 3 of 3).

www.SteamPoweredRadio.com

SYMBOL	DESCRIPTION	MANUFACTURER'S PART NUMBER	MFR CODE	COLLINS PART NUMBER
	831G-2 20-KW FM TRANSMITTER 831G-2B 22.5-KW FM TRANSMITTER			622-2555-XXX 622-2556-XXX
A1	CONTROL PANEL SEE BREAKDOWN ON PAGE 6-13			786-3243-001
A2	REMOTE CONTROL ASSEMBLY -OPTIONAL EQUIPMENT- SEE BREAKDOWN ON PAGE 6-17			786-3327-001
A3	IC BOARD SEE BREAKDOWN ON PAGE 6-19			786-3499-001
A4	310Z-2 FM EXCITER SEE SEPARATE PUBLICATION			622-2184-001
A5	FILAMENT REGULATOR SEE BREAKDOWN ON PAGE 6-22			786-3085-001
A6	CIRCUIT BREAKER PANEL SEE BREAKDOWN ON PAGE 6-24			786-3416-001
A7	TUNING/POWER CONTROL RELAY BOARD SEE BREAKDOWN ON PAGE 6-26			786-3018-001
A8	POWER CONTROL REGULATOR SEE BREAKDOWN ON PAGE 6-28			627-6683-001
A9	POWER CONTROL PANEL SEE BREAKDOWN ON PAGE 6-30			789-4342-C01
A10	2 KV POWER SUPPLY SEE BREAKDOWN ON PAGE 6-32			789-4358-001
A11	RF DRIVER ASSEMBLY SEE BREAKDOWN ON PAGE 6-34			786-3309-001
A12	REMOTE CONTROL LATCHING RELAY BOARD -OPTIONAL EQUIPMENT- SEE BREAKDOWN ON PAGE 6-38			778-2538-001
A13	RF OUTPUT LOW-PASS FILTER SEE BREAKDOWN ON PAGE 6-40			786-3451-C01
A14	POWER SUPPLY FILTER SEE BREAKDOWN ON PAGE 6-42			786-3583-C01
A15	METERING MULTIPLIER BOARD SEE BREAKDOWN ON PAGE 6-46			786-3168-001
A16	DIRECTIONAL COUPLER SEE BREAKDOWN ON PAGE 6-48			786-3264-C01
A17	BLEEDER RESISTOR PANEL SEE BREAKDOWN ON PAGE 6-50			786-3154-C01
A18	POWER AMPLIFIER CAVITY SEE BREAKDOWN ON PAGE 6-52			786-3335-001
A19	INPUT TERMINAL PANEL SEE BREAKDOWN ON PAGE 6-58			786-3333-001
A20	CARD CAGE ASSEMBLY SEE BREAKDOWN ON PAGE 6-60			786-3301-001
A21	POWER AMPLIFIER SOCKET SEE BREAKDOWN ON PAGE 6-62			786-3686-C01
A22	OVERLOAD AND METER CALIBRATE PANEL SEE BREAKDOWN ON PAGE 6-64			786-3666-001
A23	EXTENDER CARD NOTE--ACCESSORY ITEM NOT SHOWN INCLUDES CONNECTOR, ELECTRICAL 4 CONTACTS	375430904501	91662	771-9168-001 372-2425-040
A24	FAULT TALLY AND AUTOMATIC RECYCLE PANEL SEE BREAKDOWN ON PAGE 6-67			627-5129-001
B1	FAN, CENTRIFUGAL	B79A10R7	19070	009-0167-010
B2	MOTOR, ALTERNATING CURRENT 0.5A, 208/220 VAC	SK33GG102	88422	230-0593-010
C1	NOT USED			
C2	NOT USED			
C3	CAPACITOR, FXD, PAPER 30 UF, 10% TOL, 7.5 VDCW	702013-5703	53021	930-0781-030

www.SteamPoweredRadio.com

SYMBOL	DESCRIPTION	MANUFACTURER'S PART NUMBER	MFR CODE	COLLINS PART NUMBER
C4 THROUGH C44	NOT USED			
C45	BLOCKING CAPACITOR			786-3597-001
C46 THROUGH C49	NOT USED			
C50	PA LOADING CAPACITOR			786-3048-001
C51	PA TUNING CAPACITOR			786-3049-001
CR1 THROUGH CR11	NOT USED			
CR12	DIODE	1N645	14433	353-2607-000
F1 THROUGH F14	NOT USED			
F15	FUSE, CARTRIDGE 350 AMP CURRENT RATING	A25X350	71424	264-0917-750
F16	SAME AS F15			
F17	SAME AS F15			
J1	NOT USED			
J2	NOT USED			
J3	CONNECTOR, ELECTRICAL 1 CONTACT	5258BLK	74545	368-0136-010
K1 THROUGH K11	NOT USED			
K12	RELAY, ARMATURE 3 FORM C CONTACT ARRANGEMENT	KUP14D5124V	77342	970-0007-250
L1	REACTOR 4 H INDUCTANCE	E16437	80008	668-0199-010
L2	REACTOR 1 H INDUCTANCE	E16439	80008	668-0200-010
L3	NOT USED			
L4	NOT USED			
L5	COIL, RF 4.7 UH, 10% TOL	240-0178-000	82142	240-0178-000
PS1	28 VOLT POWER SUPPLY SEE BREAKDOWN ON PAGE 6-73			786-3013-001
PS2	PA BIAS POWER SUPPLY SEE BREAKDOWN ON PAGE 6-75			786-3081-001
S1	NOT USED			
S2	NOT USED			
S3	NOT USED			
S4	SWITCH, SENSITIVE SPDT CONTACT ARRANGEMENT INCLUDES	MS25253-4	96906	260-0025-000
	ACTUATOR, SWITCH	JV9	91929	260-0026-000
S5	SAME AS S4			
S6	NOT USED			
S7	NOT USED			
S8	SHORTING SWITCH INCLUDES			786-3156-001
	SPRING, SHORTING SWITCH			540-5342-002
	STRAP, GROUNDING			542-1768-002
	STRIP, SHORTING			542-1770-002
	CONTACT, SHORTING			542-1773-002
	SHAFT, FLAT, STRAIGHT			542-2242-003
	INSULATOR, STANDOFF	3BX3841	71590	190-0026-000
S9	SAME AS S8			
T1	TRANSFORMER, PWR, STEP-UP	E16436	80008	664-0124-010
T2	TRANSFORMER, PWR, STEP-UP	E16438	80008	664-0123-010
T3	TRANSFORMER, PWR, STEP-UP	E16445	80008	664-0125-010
T4	TRANSFORMER, PWR, STEP-DOWN	E12322	80008	662-0043-000
T5	TRANSFORMER, PWR, STEP-DOWN	3-18174	70674	662-0410-020
XF1 THROUGH XF14	NOT USED			

www.SteamPoweredRadio.com

SYMBOL	DESCRIPTION	MANUFACTURER'S PART NUMBER	MFR CODE	COLLINS PART NUMBER
XF15/17	FUSEHOLDER 225- 600A CURRENT RATING	3515	71400	265-1269-020
V1	NOT USED			
V2	NOT USED			
V3	ELECTRON TUBE	8281-4CX15000A	06980	256-0157-000
VR1	SUPPRESSOR, PLATE			625-8349-001
	INCLUDES			
	ABSORBER, OVERVOLTAGE -CR1 THRU CR4-	6RS21SA11H15	09214	353-0281-140
VR2	SUPPRESSOR, SCREEN			625-8348-001
	INCLUDES			
	ABSORBER, OVERVOLTAGE -CR5, CR6-	6RS21SA11H11	09214	353-0283-100
Z1	COMPLETE RECTIFIER	67-7226	81483	353-6241-000
	INCLUDES			
	RECTIFIER COLUMN -QTY 3-	67-7329	81483	353-6242-000
	INCLUDES			
	MODULE -QTY 31-	67-7468	81483	353-6243-000
	MODULE, AC CONNECT -QTY 3-	67-7469	81483	353-6244-000
1	SHORTING STICK			786-3553-001
	INCLUDES			
	ROD, SHORTING			547-6574-002
	SPRING, COMPRESSION			547-6575-002
	CORD, SHORTING STICK			786-3550-001
2	CONDUCTOR, CENTER	24216-2	84147	013-1331-040
3	CLAMP, NEUTRALIZING -QTY 2-			786-3236-001
4	CLAMP, NEUTRALIZING -QTY 2-			786-3237-001
5	IMPELLER, FAN	009-3118-010	60399	009-3118-010
6	KNOB			757-0228-001
7	BEARING ASSEMBLY, PANEL	148	83330	015-3437-010
8	JOINT, UNIVERSAL	MB360	88797	233-0132-000
9	SHAFT			789-4365-001
10	COUPLING, INSULATOR	FC46-5	80583	015-3438-010
11	FILTER -USED ON 831G-2 ONLY-			786-3457-001
12	RETAINER, UPPER -USED ON 831G-2 ONLY-			786-3537-001
13	DEFLECTOR			786-5842-001
14	CLAMP	QS200M104W	08484	013-1309-430

www.SteamPoweredRadio.com

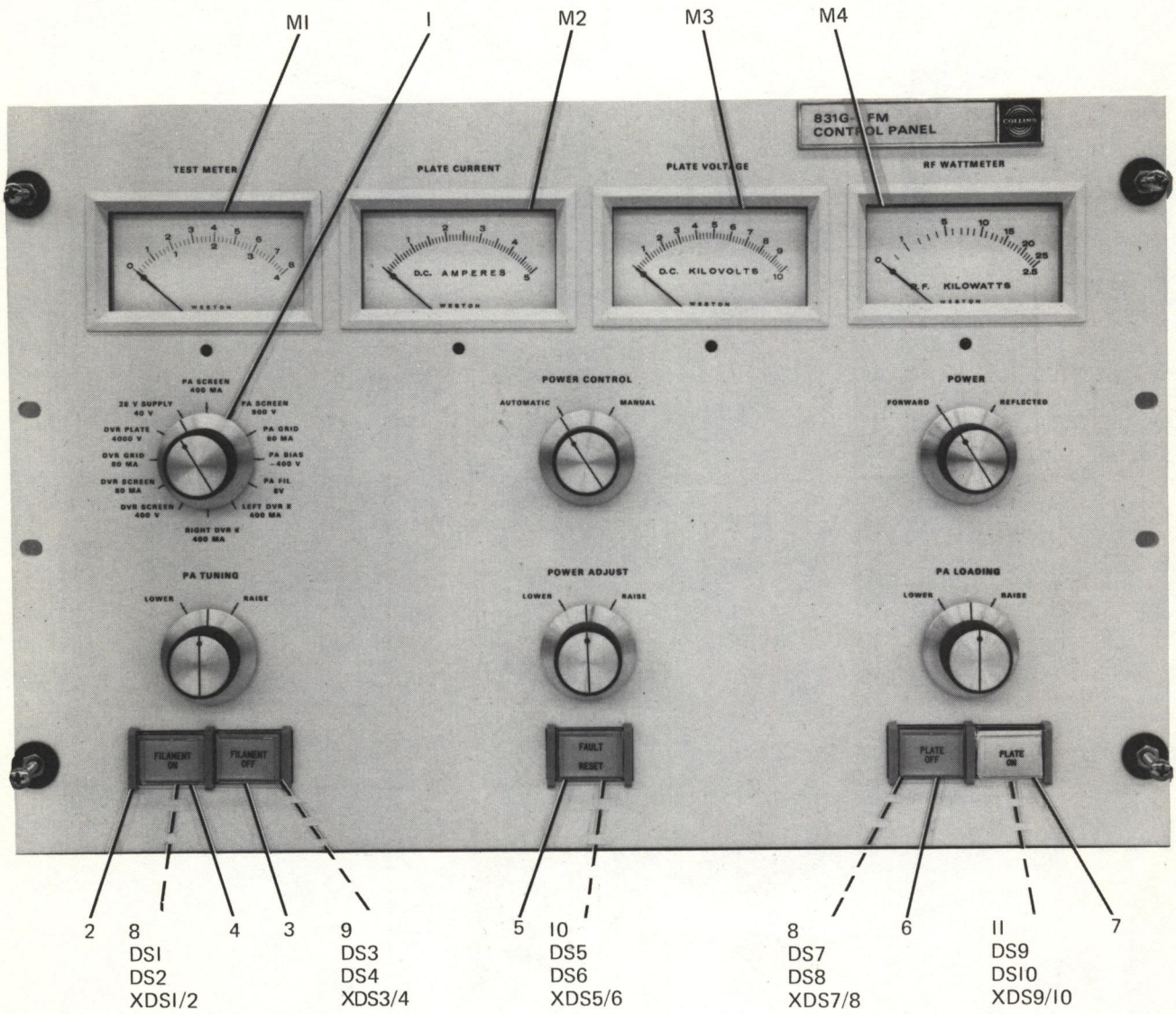

B700 405 Pb

Figure 6-2. Control Panel, A1 (Sheet 1 of 2).

If You Didn't Get This From My Site,
Then It Was Stolen From....
www.SteamPoweredRadio.com

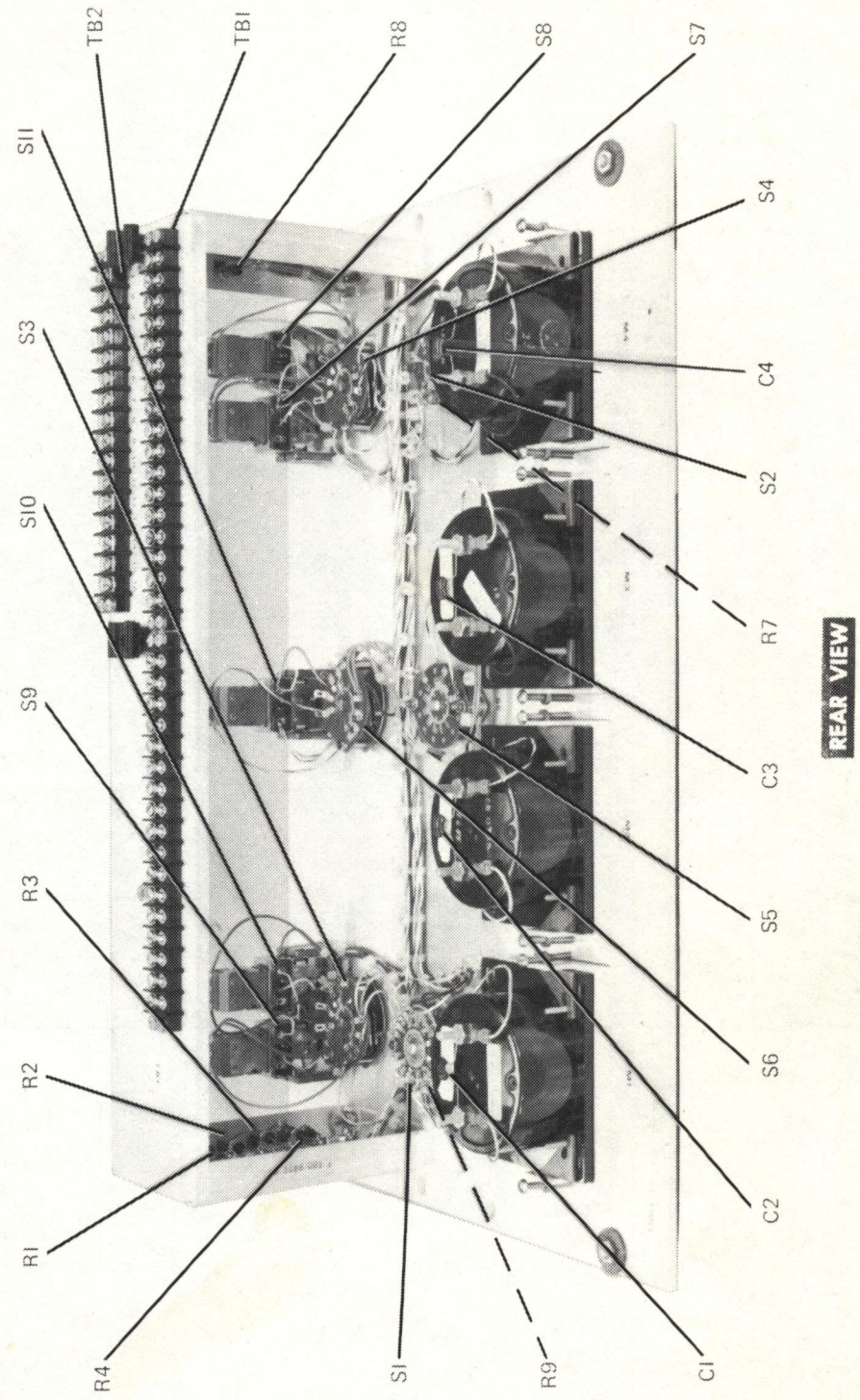

Figure 6-2. Control Panel, A1 (Sheet 2 of 2).

www.SteamPoweredRadio.com

SYMBOL	DESCRIPTION	MANUFACTURER'S PART NUMBER	MFR CODE	COLLINS PART NUMBER
	CONTROL PANEL, A1			786-3243-001
C1	CAPACITOR, FXD, MICA 100 PF, 5% TOL, 500 VDCW	CM05FD101J03	81349	912-2816-000
C2	SAME AS C1			
C3	SAME AS C1			
C4	SAME AS C1			
DS1	LAMP, INCANDESCENT 0.04A, 28 VOLTS	MS25237-327	96906	262-0179-000
DS2 THROUGH DS10	SAME AS DS1			
M1	AMMETER, DC TEST 0 TO 1 MA	260842	65092	458-0783-160
M2	AMMETER, DC PLATE CURRENT 0 TO 1 MA	260840	65092	458-0783-150
M3	AMMETER, DC PLATE VOLTAGE 0 TO 2 MA	260841	65092	458-0783-170
M4	AMMETER, DC WATTMETER 0 TO 100 MA	265202	65092	458-0821-020
R1	RESISTOR, FXD, COMPOSITION 39 OHMS, 10% TOL, 1 WATT	RCR32G390KS	81349	745-3293-000
R2 THROUGH R5	SAME AS R1			
R6	NOT USED			
R7	RESISTOR, FXD, FILM 1740 OHMS, 1% TOL, 1/4 WATT	RN60D1741F	81349	705-6758-000
R8	RESISTOR, FXD, COMPOSITION 39 KILOHMS, 10% TOL, 1 WATT	RCR32G393KS	81349	745-3419-000
R9	RESISTOR, FXD, FILM 301 OHMS, 1% TOL, 1/2 WATT	RN65D3010F	81349	705-7071-000
S1	SWITCH, ROTARY DP12T CONTACT ARRANGEMENT	271711K2	76854	259-2219-010
S2	SWITCH, ROTARY DPDT CONTACT ARRANGEMENT	271016K1	76854	259-2759-010
S3	SWITCH, ROTARY DP3T CONTACT ARRANGEMENT	242752H1	76854	259-1980-000
S4	SAME AS S3			
S5	SWITCH, ROTARY SPDT CONTACT ARRANGEMENT	210786H1	76854	259-1321-000
S6	SAME AS S3			
S7	SWITCH, PUSH, ILLUMINATED SPDT CONTACT ARRANGEMENT	12-327	96182	266-6806-100
S8 THROUGH S11	SAME AS S7			
TB1	STRIP, TERMINAL 17 TERMINALS -QTY 2-	353-18-17-001	71785	367-0025-000
TB2	STRIP, TERMINAL 16 TERMINALS	353-18-16-001	71785	367-0024-000
XDS1/2	SWITCH, PUSH, ILLUMINATED	12-1	96182	266-6806-010
XDS3/4 THROUGH XDS9/10	SAME AS XDS1/2			
1	KNOB, ROUND, SKIRTED -QTY 6-			757-0233-003
2	BARRIER, VERTICAL MOUNTING -QTY 8-	12S2	96182	266-6806-030
3	LENS, ENGRAVED FILAMENT OFF	12-240-13FILA MENTOFF	96182	266-6806-270
4	LENS, ENGRAVED FILAMENT ON	12-240-13FILA MENTON	96182	266-6806-280
5	LENS, ENGRAVED FAULT/RESET	12-240-16	96182	266-6806-800

www.SteamPoweredRadio.com

SYMBOL	DESCRIPTION	MANUFACTURER'S PART NUMBER	MFR CODE	COLLINS PART NUMBER
6	LENS, ENGRAVED PLATE OFF	12-240-13PLAT EOFF	96182	266-6806-740
7	LENS, ENGRAVED PLATE ON	12-240-13PLAT EON	96182	266-6806-790
8	BOOT, BULB WHITE -QTY 4-	10W	96182	266-6268-000
9	BOOT, BULB GREEN -QTY 2-	12G	96182	266-6806-040
10	BOOT, BULB YELLOW -QTY 2-	12Y	96182	266-6806-050
11	BOOT, BULB RED -QTY 2-	12R	96182	266-6806-060

www.SteamPoweredRadio.com

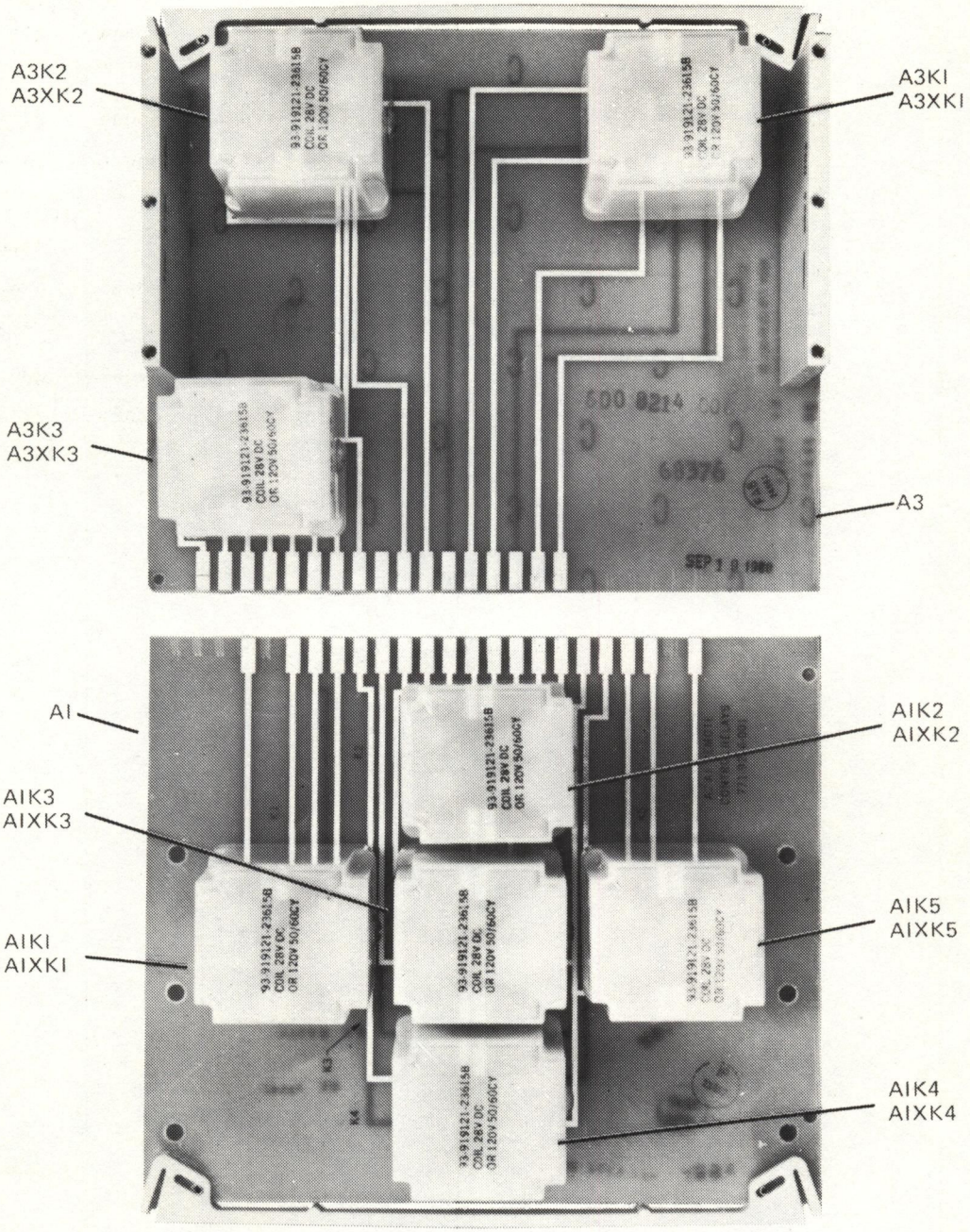

Figure 6-3. Remote Control Assembly, A2.

www.SteamPoweredRadio.com

SYMBOL	DESCRIPTION	MANUFACTURER'S PART NUMBER	MFR CODE	COLLINS PART NUMBER
	REMOTE CONTROL ASSEMBLY, A2			786-3327-001
A1	REMOTE CONTROL RELAY BOARD			771-9256-001
	INCLUDES			
	RELAY, ARMATURE	93-919454-23615A	80089	970-2454-440
	2A, 1B CONTACT ARRANGEMENT			
	-A1K1 THRU A1K5-			
	SOCKET, RELAY	93-153-31	80089	220-1399-020
	INCLUDES			
	PIN, SOCKET -QTY 8-	93-46-101	80089	220-1399-030
	-A1XK1 THRU A1XK5-			
A2	NOT USED			
A3	POWER CONTROL RELAY ASSEMBLY			778-2539-001
	INCLUDES			
	RELAY, ARMATURE	93-919454-23615A	80089	970-2454-440
	2A, 1B CONTACT ARRANGEMENT			
	-A3K1, A3K2, A3K3-			
	SOCKET, RELAY	93-153-31	80089	220-1399-020
	INCLUDES			
	PIN, SOCKET -QTY 11-	93-46-101	80089	220-1399-030
	-A3XK1, A3XK2, A3XK3-			

www.SteamPoweredRadio.com

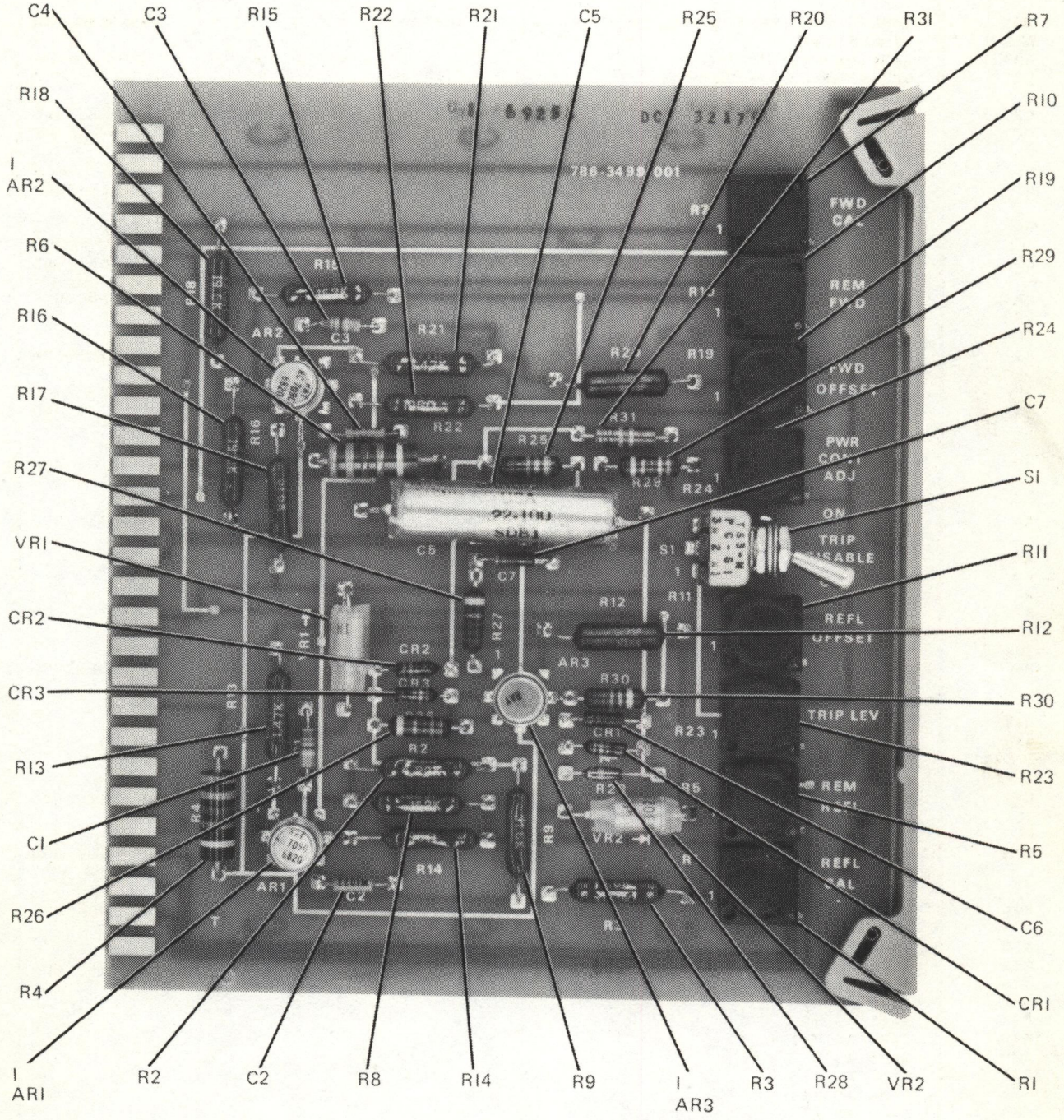

B700 404 Pb

Figure 6-4. IC Board, A3.

www.SteamPoweredRadio.com

SYMBOL	DESCRIPTION	MANUFACTURER'S PART NUMBER	MFR CODE	COLLINS PART NUMBER
	IC BOARD, A3			786-3499-001
AR1	AMPLIFIER, OPERATIONAL	U5B770939	07263	351-7140-010
AR2	SAME AS AR1			
AR3	SAME AS AR1			
C1	CAPACITOR, FXD, CERAMIC 5600 PF, 10% TOL, 100 VDCW	C22A562K	16546	913-4243-080
C2	CAPACITOR, FXD, CERAMIC 200 PF, 20% TOL, 100 VDCW	CT10-201M	90634	913-5661-540
C3	SAME AS C1			
C4	SAME AS C2			
C5	CAPACITOR, FXD, ELECTROLYTIC 1 UF, MINUS 10% PLUS 75%, 50 VDCW	D29327	56289	183-1177-000
C6	CAPACITOR, FXD, CERAMIC 22 PF, 20% TOL, 100 VDCW	CT10-220M	90634	913-5661-310
C7	CAPACITOR, FXD, CERAMIC 4700 PF, 20% TOL, 100 VDCW	CT10-472M	90634	913-5661-080
CR1	DIODE	1N645	14433	353-2607-000
CR2	SAME AS CR1			
CR3	SAME AS CR1			
R1	RESISTOR, VAR, WIRE-WOUND 10 KILOHMS, 5% TOL, 3/4 WATT	RT22C2P103	81349	381-1721-130
R2	RESISTOR, FXD, FILM 4220 OHMS, 1% TOL, 1/2 WATT	RN65D4221F	81349	705-7126-000
R3	RESISTOR, FXD, FILM 19.6 KILOHMS, 1% TOL, 1/2 WATT	RN65D1962F	81349	705-7158-000
R4	RESISTOR, FXD, COMPOSITION 330 OHMS, 5% TOL, 1 WATT	RCR32G331JS	81349	745-3330-000
R5	SAME AS R1			
R6	SAME AS R4			
R7	SAME AS R1			
R8	RESISTOR, FXD, FILM 162 KILOHMS, 1% TOL, 1/2 WATT	RN65D1623F	81349	705-7202-000
R9	RESISTOR, FXD, FILM 31.6 KILOHMS, 1% TOL, 1/2 WATT	RN65D3162F	81349	705-7168-000
R10	SAME AS R1			
R11	RESISTOR, VAR, WIRE-WOUND 20 KILOHMS, 5% TOL, 3/4 WATT	RT22C2P203	81349	381-1721-150
R12	RESISTOR, FXD, FILM 287 KILOHMS, 1% TOL, 1/2 WATT	RN65D2873F	81349	705-7214-000
R13	RESISTOR, FXD, FILM 1470 OHMS, 1% TOL, 1/2 WATT	RN65D1471F	81349	705-7104-000
R14	RESISTOR, FXD, FILM 196 OHMS, 1% TOL, 1/2 WATT	RN65D1960F	81349	705-7062-000
R15	SAME AS R8			
R16	RESISTOR, FXD, FILM 14.7 KILOHMS, 1% TOL, 1/2 WATT	RN65D1472F	81349	705-7152-000
R17	SAME AS R9			
R18	SAME AS R3			
R19	SAME AS R11			
R20	SAME AS R12			
R21	SAME AS R13			
R22	SAME AS R14			
R23	SAME AS R1			
R24	SAME AS R1			
R25	RESISTOR, FXD, FILM 10 KILOHMS, 5% TOL, 1/2 WATT	RL20S103J	81349	745-2661-000
R26	RESISTOR, FXD, FILM 6800 OHMS, 5% TOL, 1/2 WATT	RL20S682J	81349	745-2651-000

www.SteamPoweredRadio.com

SYMBOL	DESCRIPTION	MANUFACTURER'S PART NUMBER	MFR CODE	COLLINS PART NUMBER
R27	RESISTOR, FXD, FILM 1500 OHMS, 5% TOL, 1/2 WATT	RL20S152J	81349	745-2610-000
R28	RESISTOR, FXD, COMPOSITION 470 KILOHMS, 10% TOL, 1/2 WATT	RCR20G474KS	81349	745-1464-000
R29	RESISTOR, FXD, FILM 3900 OHMS, 5% TOL, 1/2 WATT	RL20S392J	81349	745-2636-000
R30	RESISTOR, FXD, FILM 10 KILOHMS, 5% TOL, 1/2 WATT	RL20S103G	81349	745-2661-000
R31	RESISTOR, FXD, COMPOSITION 15 KILOHMS, 10% TOL, 1/2 WATT	RCR20G153KS	81349	745-1401-000
S1	SWITCH, TOGGLE SPDT CONTACT ARRANGEMENT	TS3PCMSI	04009	266-5032-030
VR1	DIODE	1N3022A	03877	353-1317-000
VR2	SAME AS VR1			
1	INSULATOR, DISC -QTY 3-	7717-19N	13103	352-9552-020

If You Didn't Get This From My Site,
Then It Was Stolen From....
www.SteamPoweredRadio.com

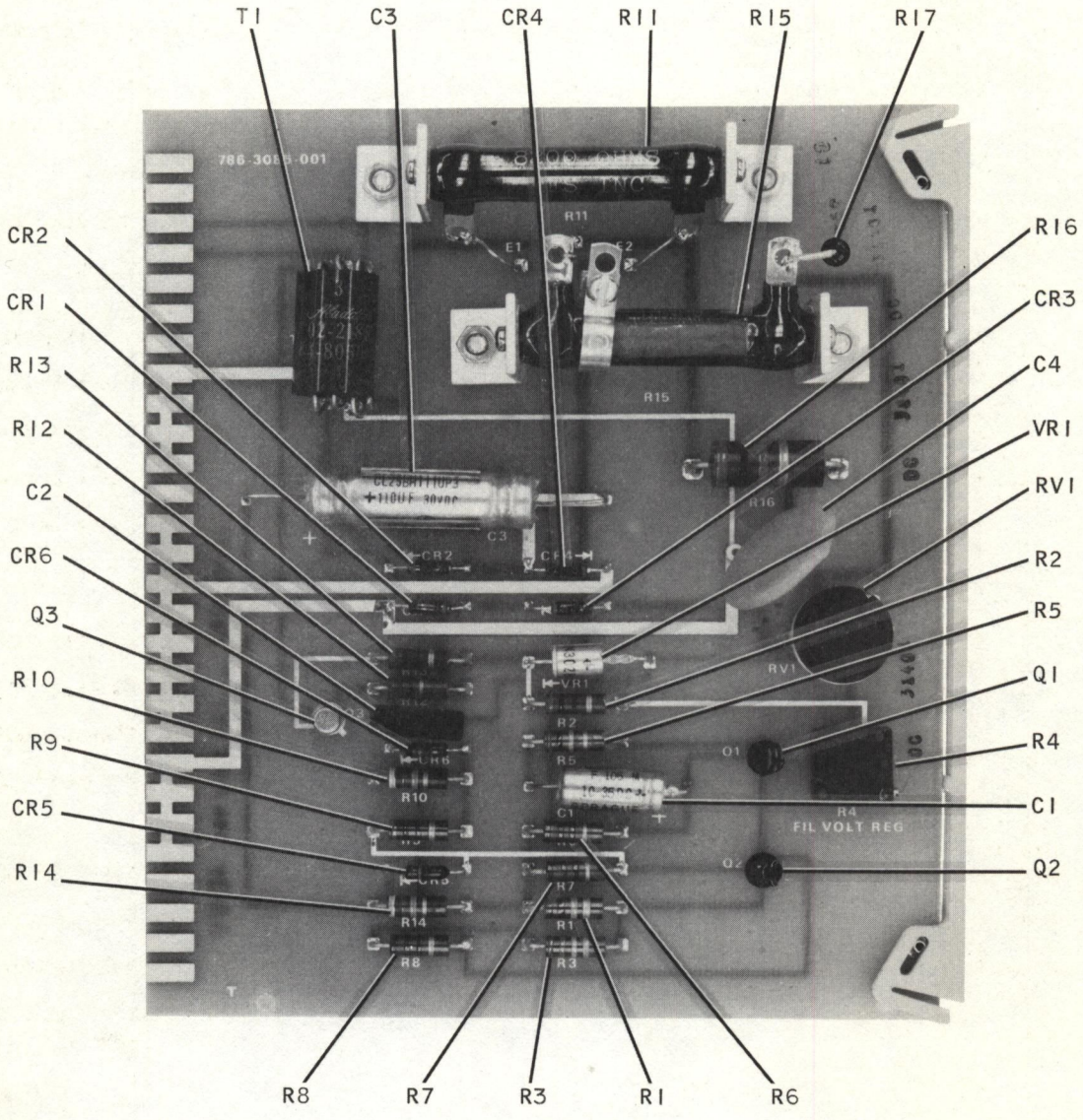

MW200-0001-Pb

Figure 6-5. Filament Regulator, A5.

www.SteamPoweredRadio.com

SYMBOL	DESCRIPTION	MANUFACTURER'S PART NUMBER	MFR CODE	COLLINS PART NUMBER
	FILAMENT REGULATOR, A5			786-3085-001
C1	CAPACITOR, FXD, ELECTROLYTIC 10 UF, 20% TOL, 35 VDCW	CS13BF106M	81349	184-6219-000
C2	CAPACITOR, FXD, FILM 0.22 UF, 10% TOL, 50 VDCW	65F15AA224	99971	933-0870-000
C3	CAPACITOR, FXD, ELECTROLYTIC 110 UF, PLUS 75% MINUS 15%, 30 VDCW	CL25BH111UP3	81349	184-8012-000
C4	CAPACITOR, FXD, CERAMIC 0.1 UF, PLUS 80% MINUS 20%, 50 VDCW	3857X5V0-104Z	72982	913-3234-000
CR1	DIODE	1N647	08466	353-2596-000
CR2	SAME AS CR1			
CR3	SAME AS CR1			
CR4	SAME AS CR1			
CR5	DIODE	1N645	14433	353-2607-000
CR6	SAME AS CR5			
Q1	TEANSISTOR	2N3390	03508	352-0731-010
Q2	SAME AS Q1			
Q3	TRANSISTOR	2N1671B	04713	352-0361-010
R1	RESISTOR, FXD, COMPOSITION 22 KILOHMS, 10% TOL, 1/2 WATT	RCR20G223KS	81349	745-1408-000
R2	RESISTOR, FXD, COMPOSITION 2200 OHMS, 10% TOL, 1/2 WATT	RCR20G222KS	81349	745-1366-000
R3	RESISTOR, FXD, COMPOSITION 18 KILOHMS, 10% TOL, 1/2 WATT	RCR20G183KS	81349	745-1405-000
R4	RESISTOR, VAR, WIRE-WOUND 10 KILOHMS, 5% TOL, 3/4 WATT	RT22C2P103	81349	381-1721-130
R5	RESISTOR, FXD, COMPOSITION 10 KILOHMS, 10% TOL, 1/2 WATT	RCR20G103KS	81349	745-1394-000
R6	SAME AS R2			
R7	SAME AS R2			
R8	SAME AS R2			
R9	RESISTOR, FXD, COMPOSITION 1000 OHMS, 10% TOL, 1/2 WATT	RCR20G102KS	81349	745-1352-000
R10	RESISTOR, FXD, COMPOSITION 27 KILOHMS, 10% TOL, 1/2 WATT	RCR20G273KS	81349	745-1412-000
R11	RESISTOR, FXD, WIRE-WOUND 8200 OHMS, 5% TOL, 10 WATTS	0324	44655	710-0146-000
R12	RESISTOR, FXD, COMPOSITION 1500 KILOHMS, 10% TOL, 1/2 WATT	RCR20G155KS	81349	745-1485-000
R13	SAME AS R9			
R14	SAME AS R10			
R15	RESISTOR, ADJ, WIRE-WOUND 5000 OHMS, 10% TOL, 12 WATTS	1033	44655	716-0055-150
R16	RESISTOR, FXD, COMPOSITION 100 OHMS, 10% TOL, 2 WATTS	RC42GF101K	81349	745-5610-000
R17	RESISTOR, FXD, WIRE-WOUND 1000 OHMS, 5% TOL, 3 WATTS	RW69V102	81349	747-7600-250
RV1	CELL, PHOTOELECTRIC	PL581	33173	714-3219-010
T1	TRANSFORMER, PULSE ENCAPSULATED, LEAD 1 TO 2 5.5 OHMS RESISTANCE, LEAD 3 TO 4 5.5 OHMS RESISTANCE, LEAD 5 TO 6 5.5 OHMS RESISTANCE	02-2185	06978	664-8050-010
V1	DIODE	1N3028A	06751	353-1323-000

D 2041 (9 65)

www.SteamPoweredRadio.com

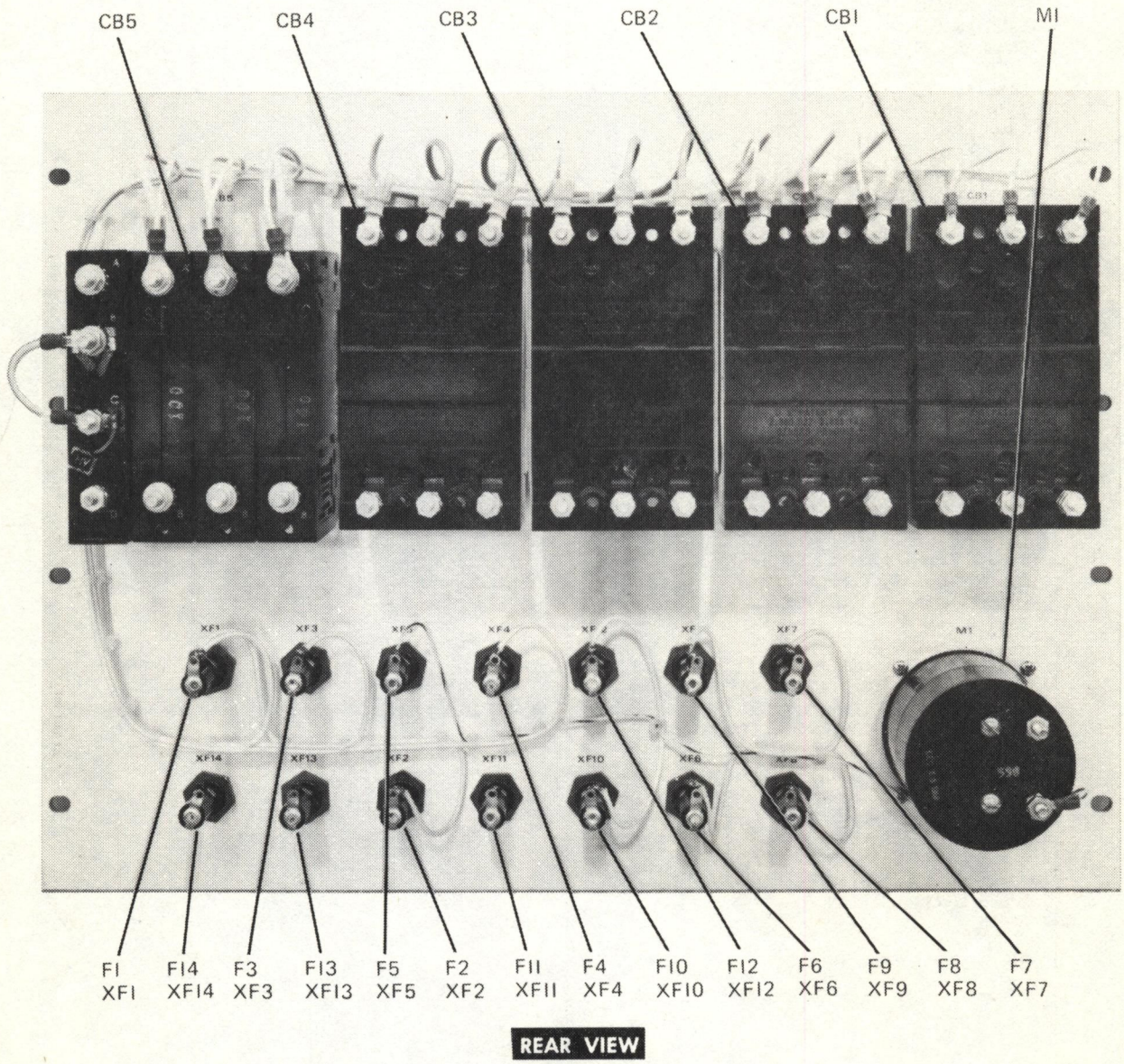

B700 402 Pb

Figure 6-6. Circuit Breaker Panel, A6.

www.SteamPoweredRadio.com

SYMBOL	DESCRIPTION	MANUFACTURER'S PART NUMBER	MFR CODE	COLLINS PART NUMBER
	CIRCUIT BREAKER PANEL, A6			786-3416-001
CB1	CIRCUIT BREAKER 1.0A CURRENT RATING	3363SHK-1-250-6 0-3	74193	260-4038-150
CB2	CIRCUIT BREAKER 10A CURRENT RATING	3363SMG410-230-6 0-3	74193	260-0407-000
CB3	CIRCUIT BREAKER 4.5A CURRENT RATING	3363SMG4-0-4-5-2 50-60-3	74193	260-4038-090
CB4	CIRCUIT BREAKER 15A CURRENT RATING	3363SMG415-230-6 0-3	74193	260-0409-000
CB5	CIRCUIT BREAKER 100A CURRENT RATING	CD4A3A3B6	74193	264-0972-010
F1	FUSE, CARTRIDGE 8A CURRENT RATING	MDA8	71400	264-0912-320
F2	FUSE, CARTRIDGE 3A CURRENT RATING	F02B125V3AS	81349	264-0009-000
F3	SAME AS F1			
F4	FUSE, CARTRIDGE 0.25A CURRENT RATING	MDL1-4	71400	264-0291-000
F5	SAME AS F4			
F6	FUSE, CARTRIDGE 1A CURRENT RATING	F02B250V1AS	81349	264-4280-000
F7	FUSE, CARTRIDGE 2A CURRENT RATING	F02B125V2AS	81349	264-0008-000
F8	SAME AS F6			
F9	SAME AS F7			
F10	SAME AS F6			
F11	SAME AS F2			
F12	SAME AS F7			
F13	SAME AS F7			
F14	SAME AS F7			
M1	METER, TIME TOTALIZING	458-0190-000	82386	458-0190-000
XF1	FUSEHOLDER 20A CURRENT RATING	HKLEX	71400	265-1241-090
XF2 THROUGH XF14	SAME AS XF1			

D 2041 19 651

www.SteamPoweredRadio.com

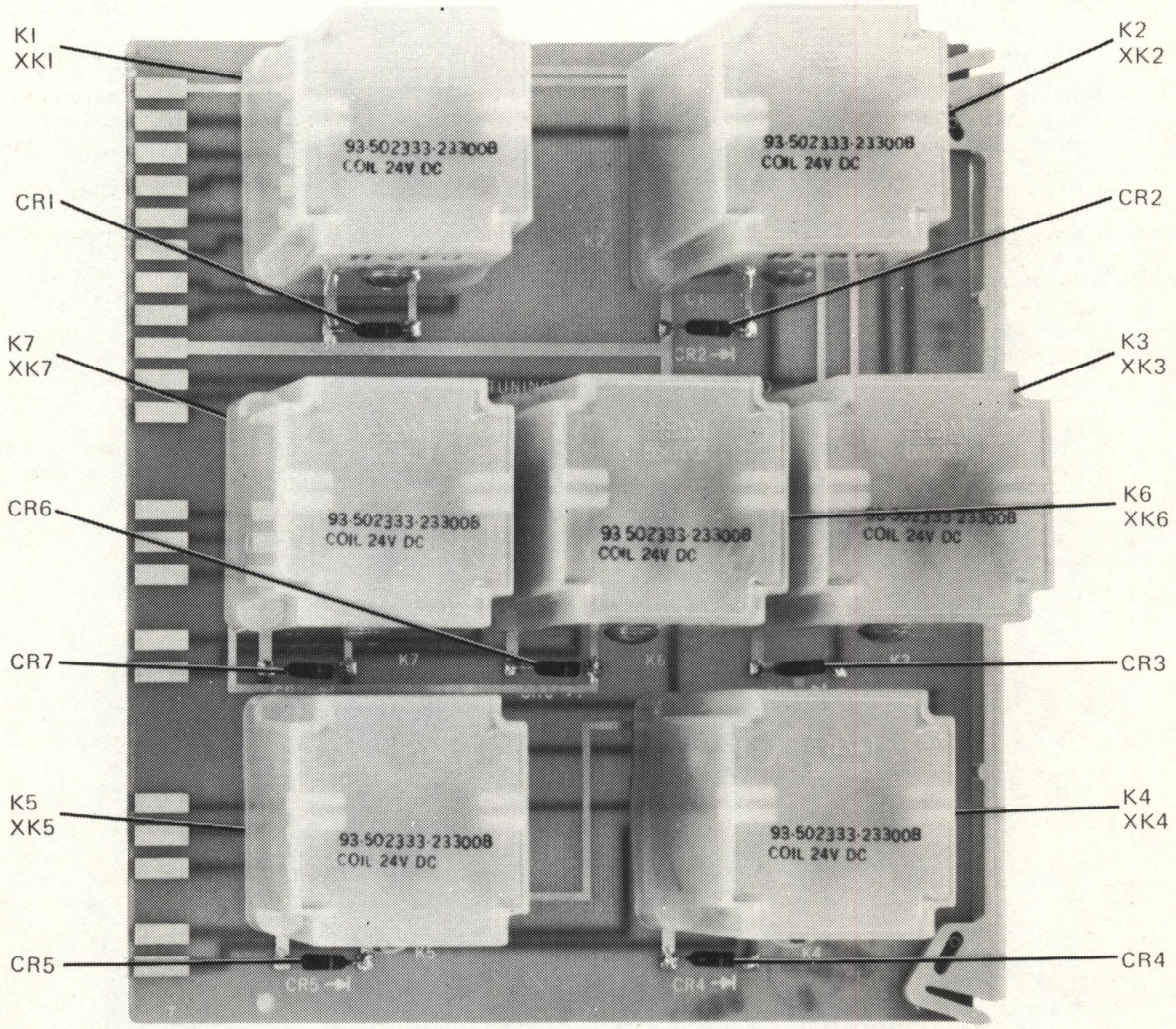

Figure 6-7. Tuning/Power Control Relay Board, A7.

www.SteamPoweredRadio.com

SYMBOL	DESCRIPTION	MANUFACTURER'S PART NUMBER	MFR CODE	COLLINS PART NUMBER
	TUNING/POWER CONTROL RELAY BOARD, A7			786-3018-001
CR1	DIODE	1N645	14433	353-2607-000
CR2 THROUGH CR7	SAME AS CR1			
K1	RELAY, ARMATURE 3C CONTACT ARRANGEMENT	93-502333-23300B	80089	970-2454-270
K2 THROUGH K7	SAME AS K1			
XK1	SOCKET, RELAY	93-153-1	80089	220-1399-020
	INCLUDES PIN -QTY 11-	93-46-101	80089	220-1399-030
XK2	SOCKET, RELAY	93-153-1	80089	220-1399-020
	INCLUDES PIN -QTY 8-	93-46-101	80089	220-1399-030
XK3 THROUGH XK7	SAME AS XK2			

www.SteamPoweredRadio.com

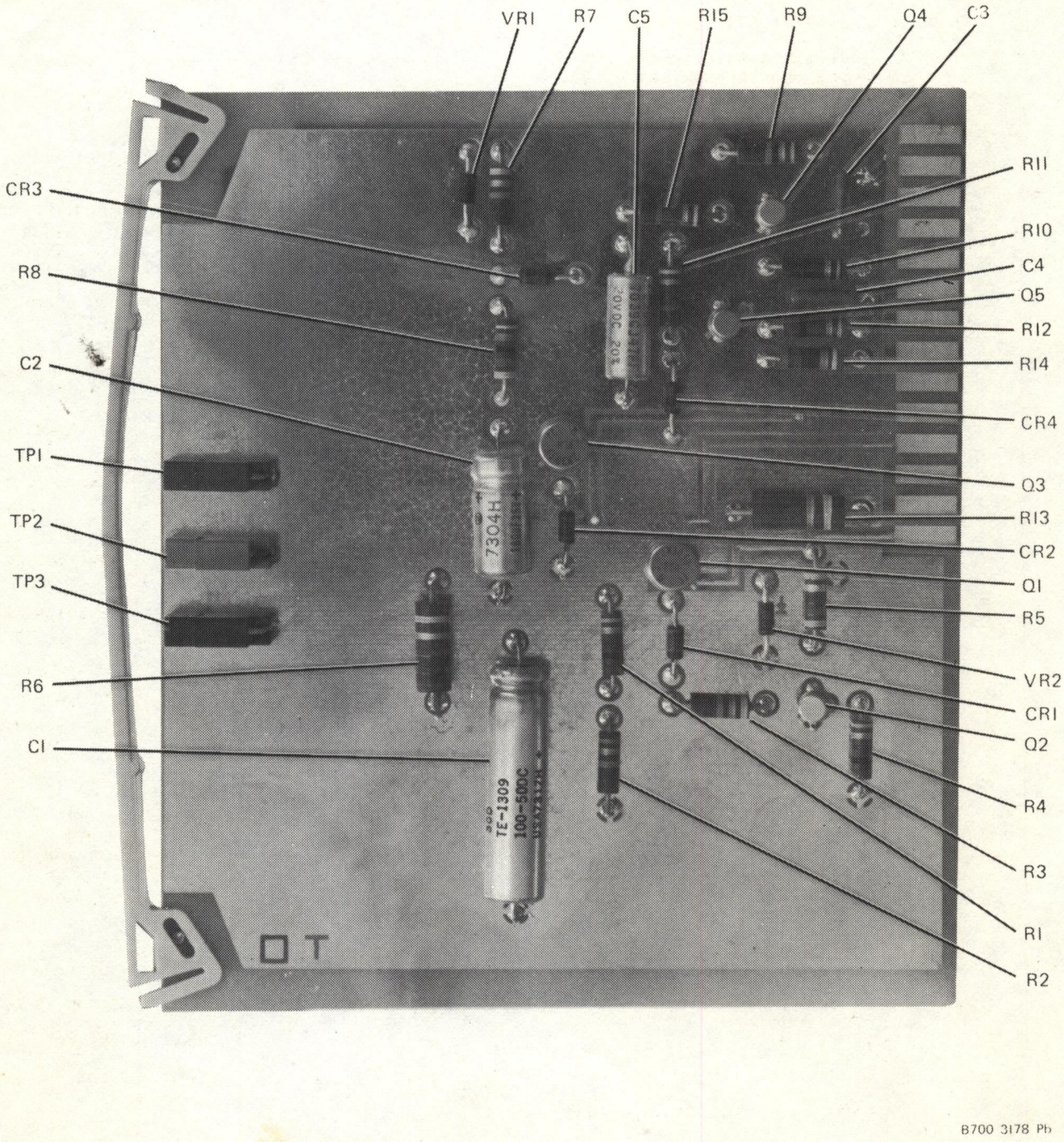

Figure 6-8. Power Control Regulator, A8.

www.SteamPoweredRadio.com

SYMBOL	DESCRIPTION	MANUFACTURER'S PART NUMBER	MFR CODE	COLLINS PART NUMBER
	POWER CONTROL REGULATOR, A8			627-6683-001
C1	CAPACITOR, FXD, ELECTROLYTIC 100 UF, MINUS 10%, PLUS 75%, 50 VDCW	30D107G0S0DH5	56289	183-1281-080
C2	CAPACITOR, FXD, ELECTROLYTIC 180 UF, 20% TOL, 25 VDCW	CL65BG181MPE	81349	184-8664-000
C3	CAPACITOR, FXD, CERAMIC 0.1 UF, PLUS 80% MINUS 20%, 25 VDCW	5C7A	56289	913-3806-000
C4	SAME AS C3			
C5	CAPACITOR, FXD, ELECTROLYTIC 47 UF, 20% TOL, 20 VDCW	M39003-01-2296	81349	184-9086-560
CR1	DIODE	1N4003	07688	353-6442-030
CR2	SAME AS CR1			
CR3	SAME AS CR1			
CR4	SAME AS CR1			
Q1	TRANSISTOR	2N3053	07688	352-0613-010
Q2	TRANSISTOR	2N2222A	07688	352-0661-020
Q3	SAME AS Q1			
Q4	SAME AS Q2			
Q5	SAME AS Q2			
R1	RESISTOR, FXD, COMPOSITION 1000 OHMS, 10% TOL, 1/2 WATT	RCR20G102KS	81349	745-1352-000
R2	RESISTOR, FXD, COMPOSITION 15 KILOHMS, 10% TOL, 1/2 WATT	RCR20G153KS	81349	745-1401-000
R3	RESISTOR, FXD, COMPOSITION 22 KILOHMS, 10% TOL, 1/2 WATT	RCR20G223KS	81349	745-1408-000
R4	SAME AS R1			
R5	RESISTOR, FXD, COMPOSITION 4700 OHMS, 10% TOL, 1/2 WATT	RCR20G472KS	81349	745-1380-000
R6	RESISTOR, FXD, COMPOSITION 820 OHMS, 10% TOL, 1 WATT	RCR32G821KS	81349	745-3349-000
R7	SAME AS R3			
R8	RESISTOR, FXD, COMPOSITION 47 OHMS, 10% TOL, 1/2 WATT	RCR20G470KS	81349	745-1296-000
R9	SAME AS R2			
R10	RESISTOR, FXD, COMPOSITION 2200 OHMS, 10% TOL, 1/2 WATT	RCR20G222KS	81349	745-1366-000
R11	RESISTOR, FXD, COMPOSITION 2700 OHMS, 10% TOL, 1/2 WATT	RCR20G272KS	81349	745-1370-000
R12	SAME AS R1			
R13	RESISTOR, FXD, COMPOSITION 1200 OHMS, 10% TOL, 1 WATT	RCR32G122KS	81349	745-3356-000
R14	RESISTOR, FXD, COMPOSITION 6800 OHMS, 10% TOL, 1/2 WATT	RCR20G682KS	81349	745-1387-000
R15	SAME AS R11			
TP1	JACK, TIP RED	5173-125-2	17117	360-0434-030
TP2	JACK, TIP ORANGE	5173-125-3	17117	360-0434-040
TP3	JACK, TIP BLACK	5173-125-0	17117	360-0434-010
VR1	DIODE	1N4740	07688	353-6481-260
VR2	SAME AS VR1			

www.SteamPoweredRadio.com

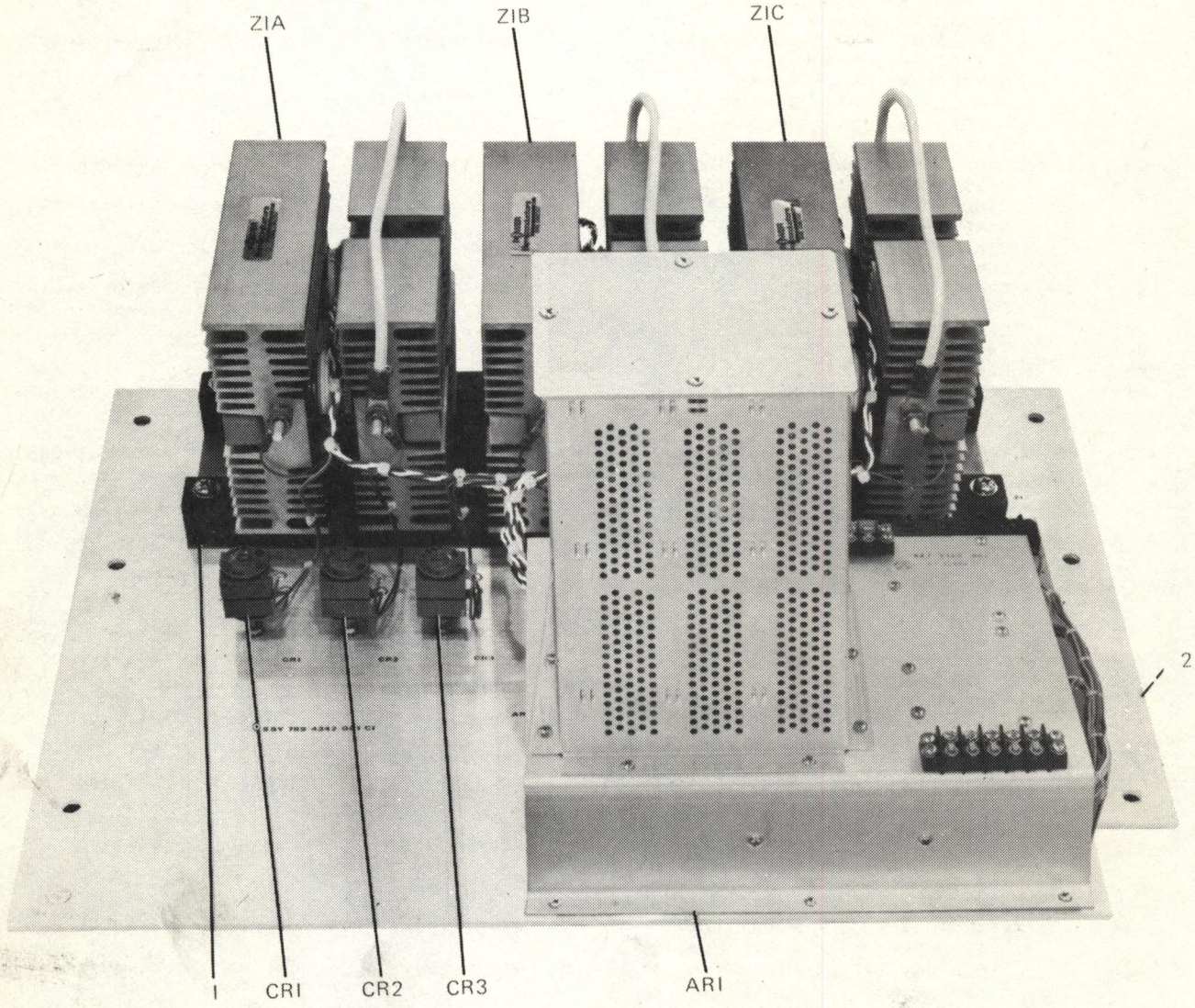

Figure 6-9. Power Control Panel, A9.

If You Didn't Get This From My Site,
Then It Was Stolen From....
www.SteamPoweredRadio.com

SYMBOL	DESCRIPTION	MANUFACTURER'S PART NUMBER	MFR CODE	COLLINS PART NUMBER
	POWER CONTROL PANEL, A9			789-4342-001
AR1	AMPLIFIER, MAGNETIC			627-5140-001
	INCLUDES			
	CAPACITOR, FXD, CERAMIC 0.1 UF, PLUS 80% MINUS 20%, 25 VDCW -C1 THRU C3-	5C7A	56289	913-3806-000
	CONNECTOR, ELECTRICAL -J1 THRU J3-	582264-2	C0779	372-5906-010
	TRANSFORMER -T1 THRU T3-	9010-6A	33954	270-0313-020
	TERMINAL BOARD -TB1-	8-161AL	71785	367-0240-000
	TERMINAL BOARD -TB2-	353-18-05-001	71785	367-0013-000
	CARD, CONTROL -QTY 3-	VPH1109-1	33954	270-0313-010
CR1	ABSORBOR, OVERVOLTAGE	6RS2LSA11H11	C9214	353-0283-100
CR2	SAME AS CR1			
CR3	SAME AS CR1			
Z1A	SCR ASSEMBLY	PS160066	POWER	353-6551-010
Z1B	SAME AS Z1A			
Z1C	SAME AS Z1A			
1	STRIP, INSULATOR			789-4349-001
2	FAN, VENTURI	021004-20125	82877	009-1829-020

www.SteamPoweredRadio.com

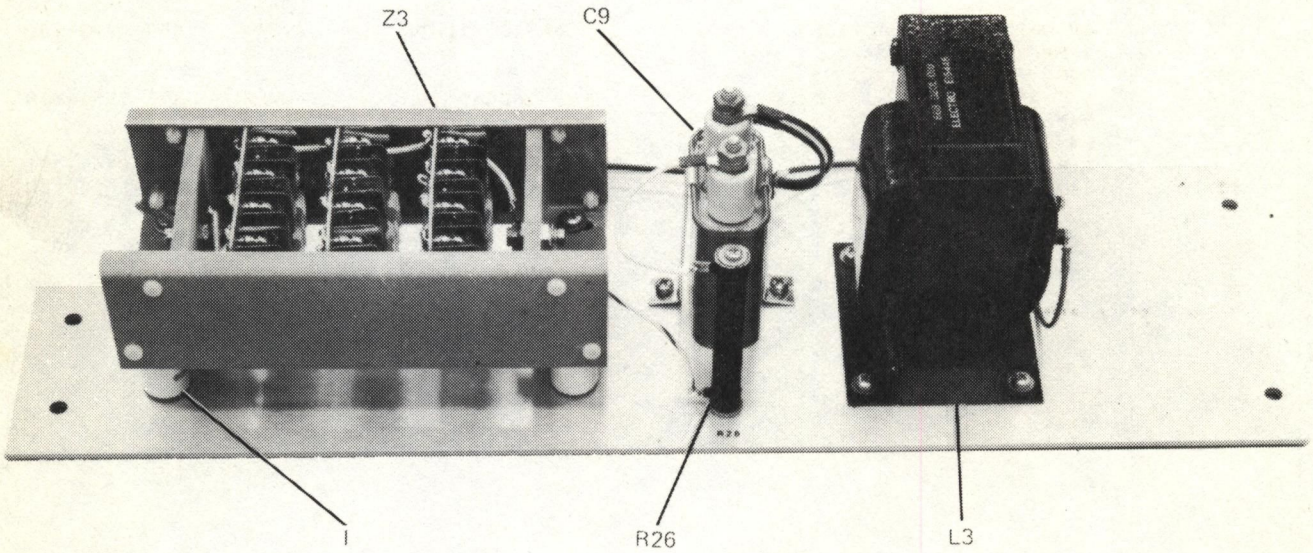

8700 398 Pb

Figure 6-10. 2-kV Power Supply, A10.

www.SteamPoweredRadio.com

SYMBOL	DESCRIPTION	MANUFACTURER'S PART NUMBER	MFR CODE	COLLINS PART NUMBER
	2 KV POWER SUPPLY, A10			789-4358-001
C1 THROUGH C8	NOT USED			
C9	CAPACITOR, FXD, PAPER 0.05 UF, 10 % TOL, 5000 VDCW	23F1129G2	01002	930-0728-000
L1	NOT USED			
L2	NOT USED			
L3	CHOKE, RF 1.5H INDUCTANCE	E16446	80008	668-0201-010
R1 THROUGH R25	NOT USED			
R26	RESISTOR, FXD, WIRE-WOUND 3900 OHMS, 5% TOL, 26 WATTS	RW33V392	81349	747-1808-000
Z1	NOT USED			
Z2	NOT USED			
Z3	RECTIFIER	6-1-2M1B398BS	05277	353-0435-010
1	INSULATOR, STANDOFF -QTY 4-	E1010	70371	190-1156-000

www.SteamPoweredRadio.com

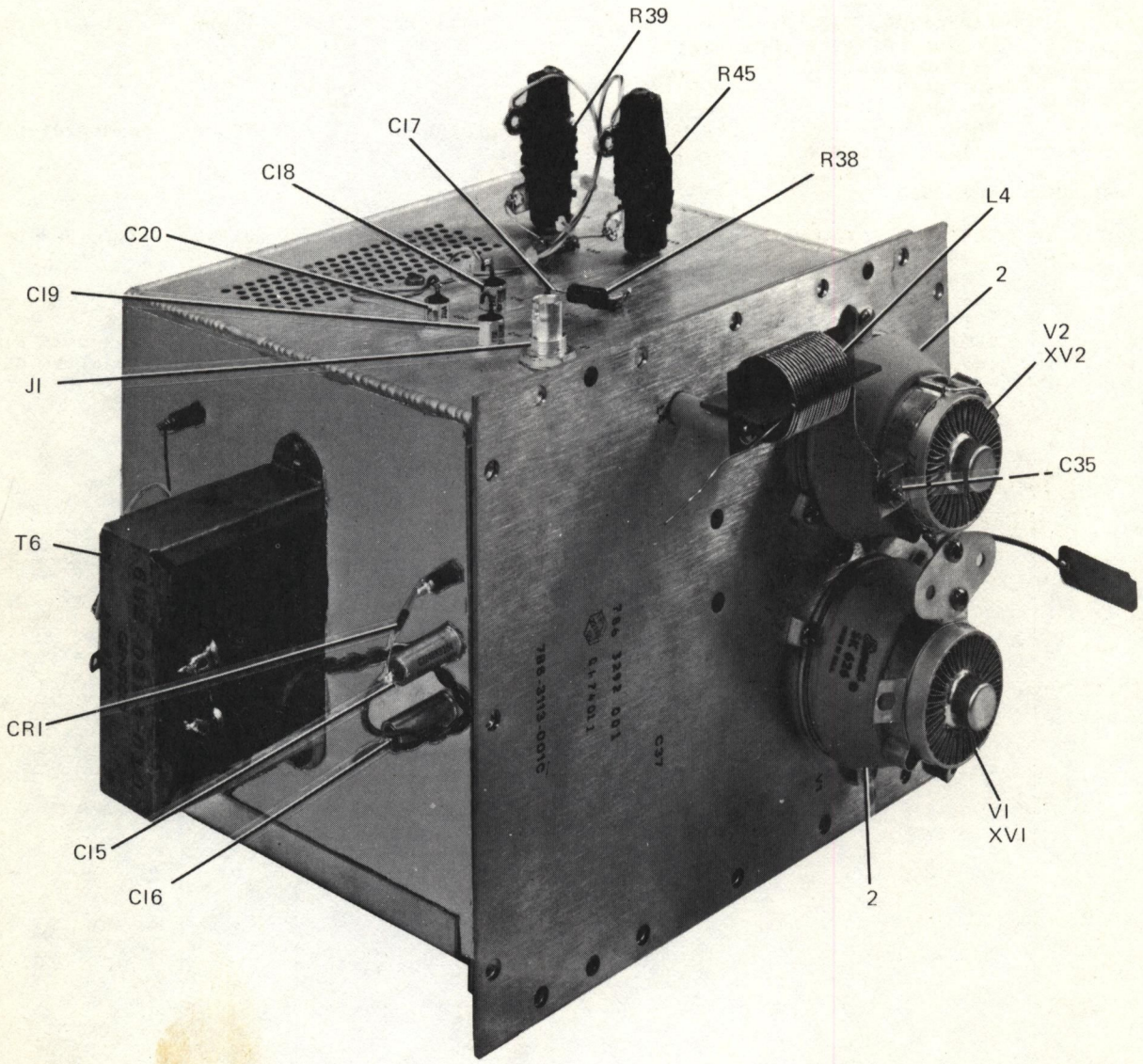

Figure 6-11. RF Driver Assembly, A11 (Sheet 1 of 2).

www.SteamPoweredRadio.com

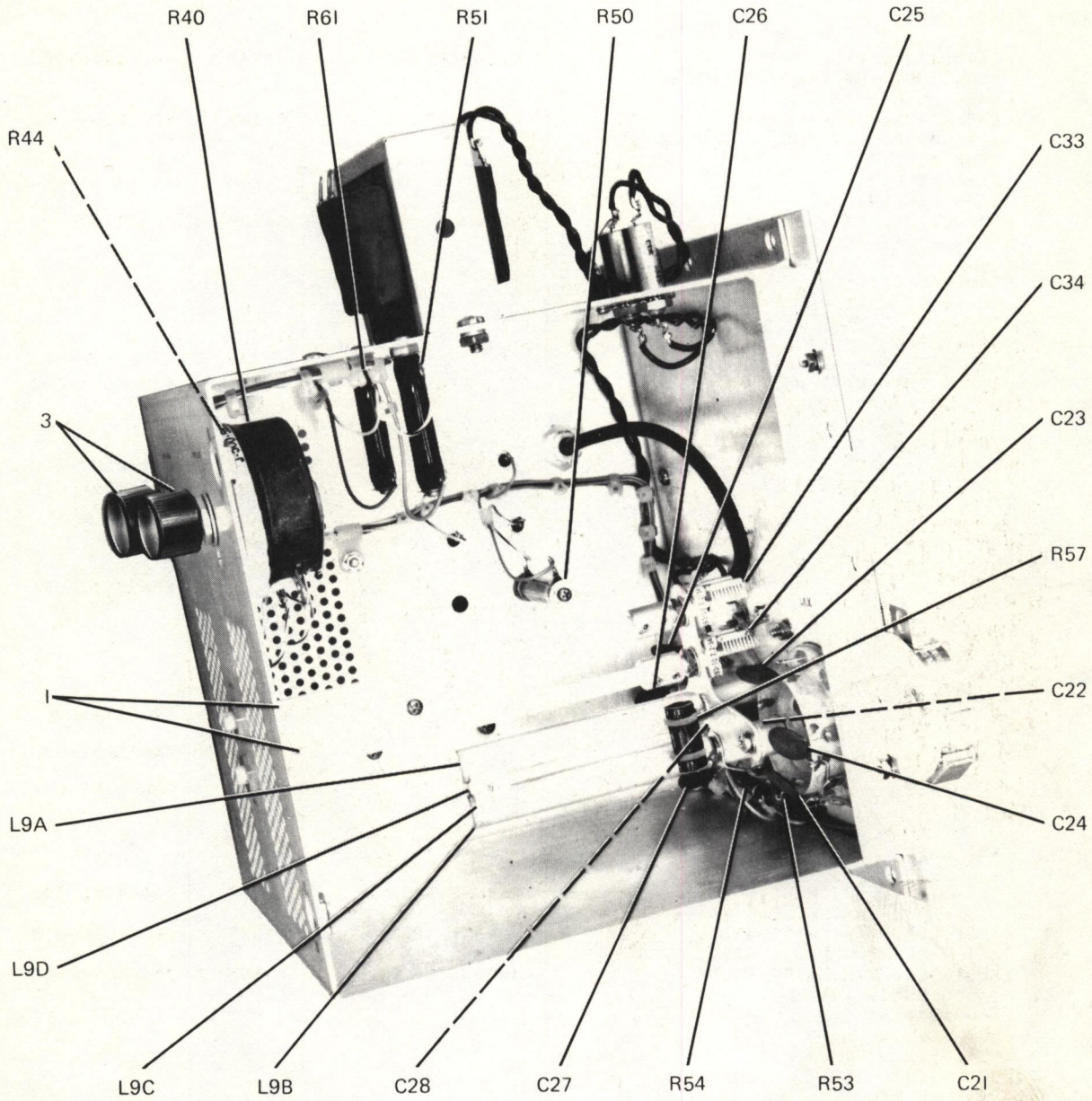

Figure 6-11. RF Driver Assembly, A11 (Sheet 2 of 2).

www.SteamPoweredRadio.com

SYMBOL	DESCRIPTION	MANUFACTURER'S PART NUMBER	MFR CODE	COLLINS PART NUMBER
	RF DRIVER ASSEMBLY, A11			786-3309-001
C1 THROUGH C14	NOT USED			
C15	CAPACITOR, FXD, PAPER 0.1 UF, 10% TOL, 100 VDCW	CZ24BKB104	81349	241-0088-000
C16	SAME AS C15			
C17	CAPACITOR, FXD, CERAMIC 1000 PF, 20% TOL, 500 VDCW	CK70AW102M	81349	913-4064-000
C18	SAME AS C17			
C19	SAME AS C17			
C20	SAME AS C17			
C21	CAPACITOR, FXD, CERAMIC 0.02 UF, 20% TOL, 500 VDCW	58C40	56289	913-2142-000
C22 THROUGH C28	SAME AS C21			
C29 THROUGH C32	NOT USED			
C33	CAPACITOR, VAR, AIR 3-18.7 PF, 1250 VDCW	160-110-3	81349	922-0033-000
C34	SAME AS C33			
C35	SAME AS C17			
CR1	DIODE	1N645	14433	353-2607-000
J1	CONNECTOR, ELECTRICAL 1 CONTACT	UG909BU	80058	357-9248-010
L1	NOT USED			
L2	NOT USED			
L3	NOT USED			
L4	COIL			786-3527-001
L5 THROUGH L8	NOT USED			
L9	COIL			
	INCLUDES			
	ROD			786-3110-001
	BAR			786-3283-003
	BAR			786-3283-004
R1 THROUGH R37	NOT USED			
R38	RESISTOR, FXD, WIRE-WOUND 5 OHMS, 1% TOL, 2.5 WATTS	RS2C62-5R000F	91637	746-9441-000
R39	RESISTOR, FXD, WIRE-WOUND 1 OHM, 1% TOL, 36 WATTS	2K46C1-1PCT	44655	710-5076-010
R40	RESISTOR, VAR, WIRE-WOUND 500 OHMS, 10% TOL, 50 WATTS	J500S553E	44655	735-1013-410
R41	NOT USED			
R42	NOT USED			
R43	NOT USED			
R44	SAME AS R40			
R45	SAME AS R39			
R46 THROUGH R49	NOT USED			
R50	RESISTOR, FXD, WIRE-WOUND 820 OHMS, 5% TOL, 11 WATTS	RW29V821	81349	746-6158-000
R51	RESISTOR, FXD, WIRE-WOUND 160 OHMS, 5% TOL	1-3-4D57F160PORM 5PCT	44655	710-2921-000
R52	NOT USED			
R53	RESISTOR, FXD, COMPOSITION 47 OHMS, 10% TOL, 1 WATT	RCR32G470KS	81349	745-3296-000

www.SteamPoweredRadio.com

SYMBOL	DESCRIPTION	MANUFACTURER'S PART NUMBER	MFR CODE	COLLINS PART NUMBER
R54	SAME AS R53			
R55	NOT USED			
R56	NOT USED			
R57	RESISTOR, FXD, COMPOSITION 50 OHMS, 10% TOL, 16.5 WATTS	780SP2	10646	712-0129-000
R58 THROUGH R60	NOT USED			
R61	SAME AS R51			
T1 THROUGH T5	NOT USED			
T6	TRANSFORMER, PWR, STEP-DOWN	40-9023	86151	662-0394-010
V1	ELECTRON TUBE	7203-4CX250B	49571	256-0138-000
V2	SAME AS V1			
XV1	SOCKET, ELECTRON TUBE 8 PINS	SK620A	06980	220-1294-000
XV2	SAME AS XV1			
1	ROD, EXTENSION -QTY 2-			786-3312-001
2	CHIMNEY, AIR SOCKET -QTY 2-	SK626	06980	220-1466-000
3	KNOB, PLASTIC -QTY 2-	MS91528-1D2B	96906	281-0122-000

www.SteamPoweredRadio.com

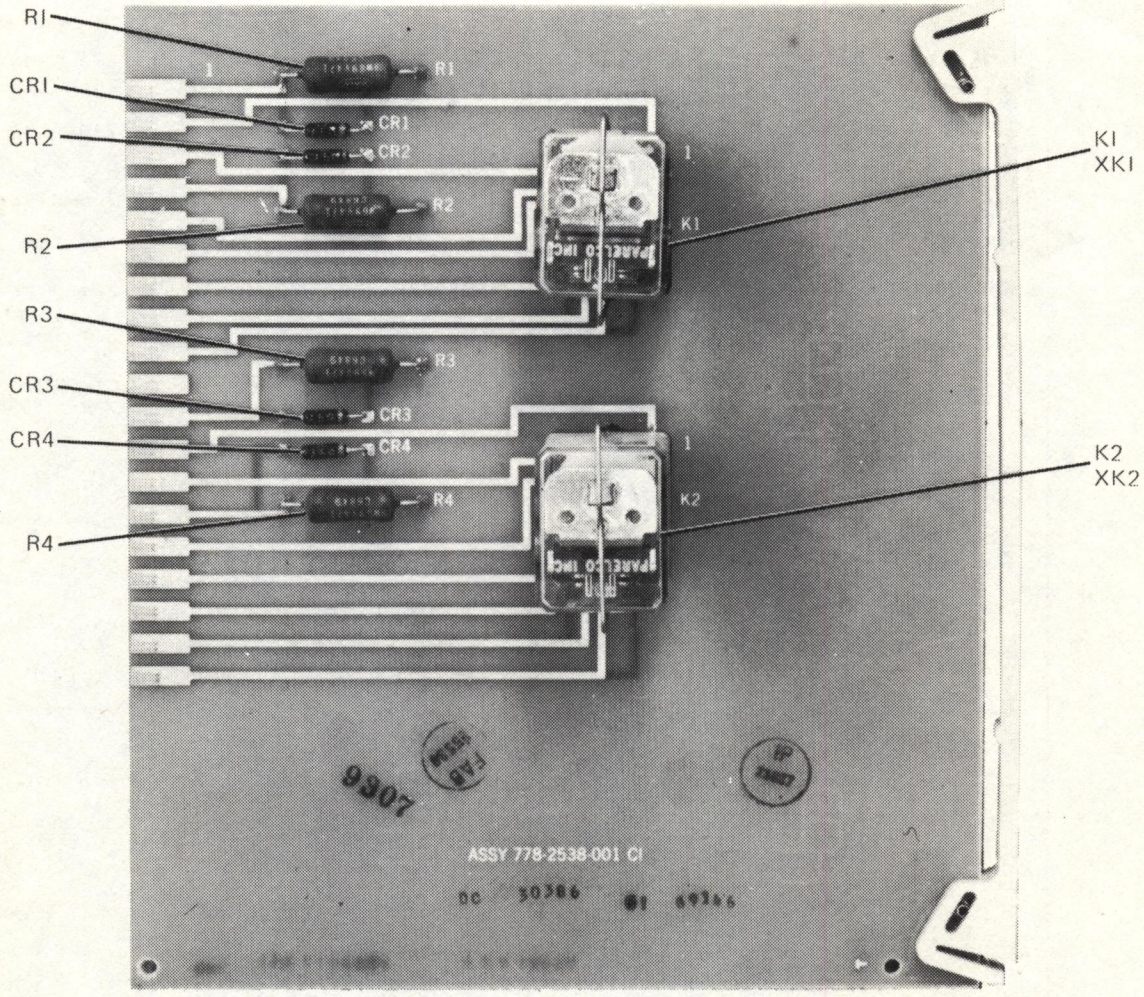

Figure 6-12. Remote Control Latching Relay Board, A12.

www.SteamPoweredRadio.com

SYMBOL	DESCRIPTION	MANUFACTURER'S PART NUMBER	MFR CODE	COLLINS PART NUMBER
	REMOTE CONTROL LATCHING RELAY BOARD, A12			778-2538-001
CR1	DIODE	1N647	01295	353-2596-000
CR2	SAME AS CR1			
CR3	SAME AS CR1			
CR4	SAME AS CR1			
K1	RELAY, ARMATURE 2C CONTACT ARRANGEMENT	TF351CC2-24	70309	970-0004-030
K2	SAME AS K1			
R1	RESISTOR, FXD, WIRE-WOUND 470 OHMS, 5% TOL, 3 WATTS	RW69V471	81349	747-5391-C00
R2	SAME AS R1			
R3	SAME AS R1			
R4	SAME AS R1			
XK1	SOCKET, RELAY 10 PINS	30054-3	70309	220-1520-000
	INCLUDES PIN, GROUNDING	99-018-078-0250	72962	311-0605-CC0
XK2	SAME AS XK1			

www.SteamPoweredRadio.com

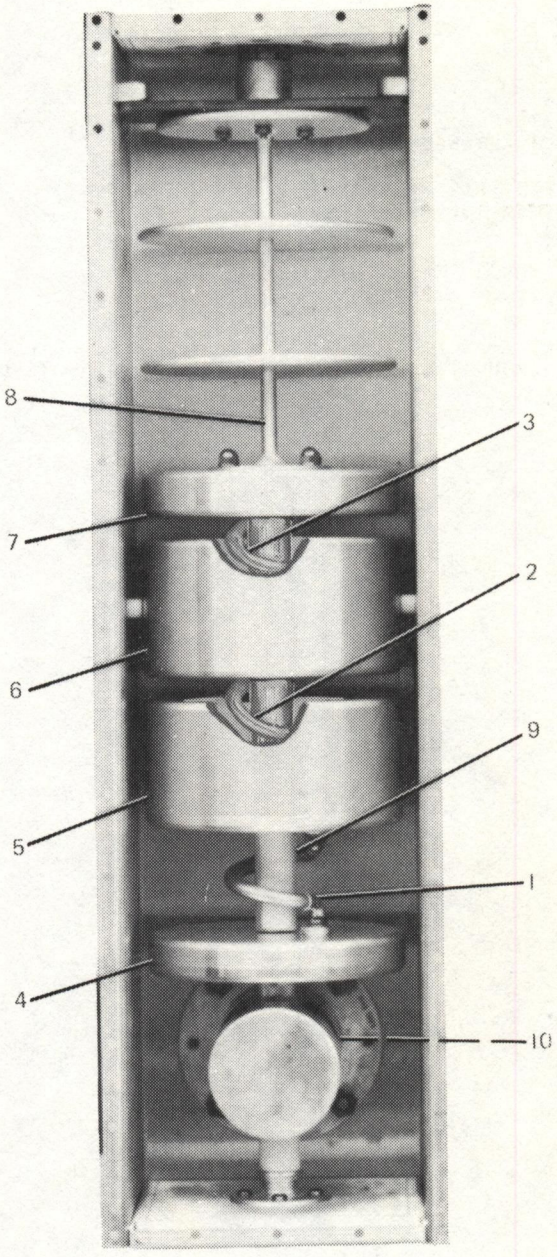

Figure 6-13. RF Output Low-Pass Filter, A13.

www.SteamPoweredRadio.com

SYMBOL	DESCRIPTION	MANUFACTURER'S PART NUMBER	MFR CODE	COLLINS PART NUMBER
	RF OUTPUT LOW-PASS FILTER, A13			786-3451-001
1	COIL ASSY			786-3367-001
2	COIL ASSY			786-3369-001
3	COIL ASSY			786-3371-001
4	CAPACITOR			786-3372-001
5	CAPACITOR			786-3373-001
6	CAPACITOR			786-3374-001
7	CAPACITOR			786-3375-001
8	CAPACITOR			786-3448-001
9	CAPACITOR, ROD			786-3435-001
10	INSULATOR, DISC			786-3469-001

If You Didn't Get This From My Site,
Then It Was Stolen From....
www.SteamPoweredRadio.com

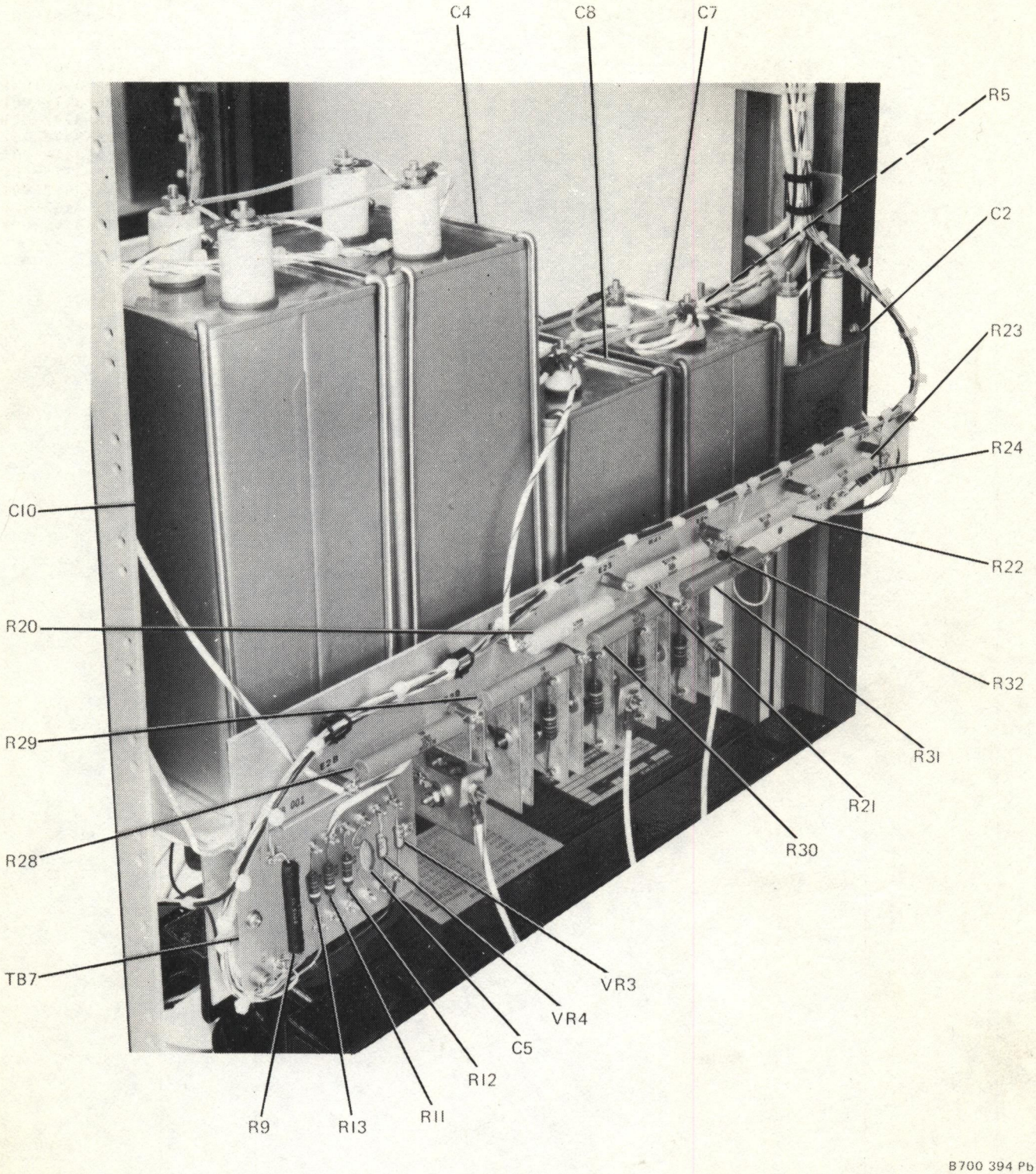

Figure 6-14. Power Supply Filter, A14 (Sheet 1 of 2).

www.SteamPoweredRadio.com

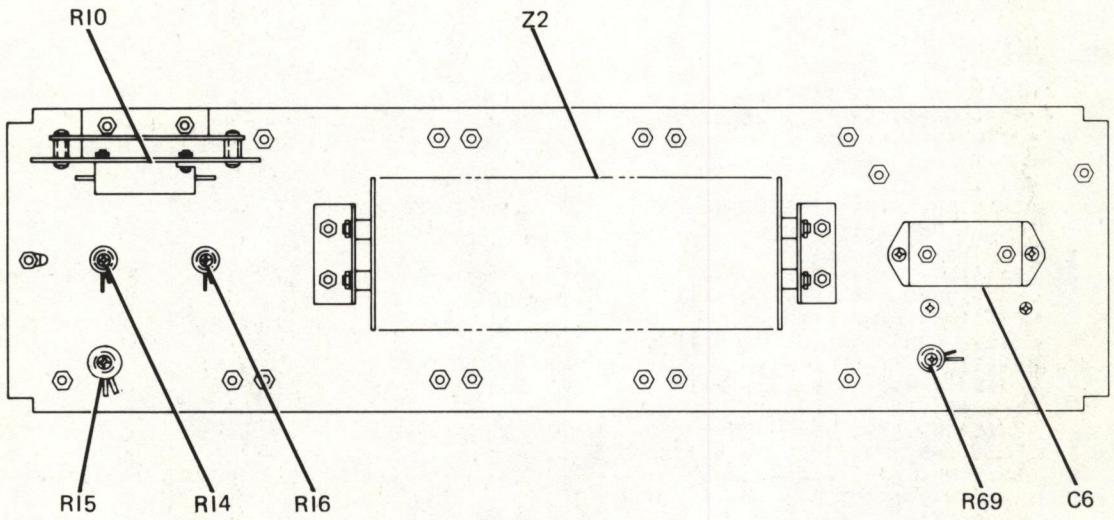

B700 462 Bx

Figure 6-14. Power Supply Filter, A14 (Sheet 2 of 2).

www.SteamPoweredRadio.com

SYMBOL	DESCRIPTION	MANUFACTURER'S PART NUMBER	MFR CODE	COLLINS PART NUMBER
	POWER SUPPLY FILTER, A14			786-3583-C01
C1	NOT USED			
C2	CAPACITOR, FXD, PAPER 0.05 UF, 10% TOL, 10,000 VDCW	Y48960	56289	930-0610-000
C3	NOT USED			
C4	CAPACITOR, FXD, PAPER 10 UF, 10% TOL, 2500 VDCW	CP70E1EK106K1	81349	962-4204-000
C5	CAPACITOR, FXD, CERAMIC 0.01 UF, 20% TOL, 500 VDCW	CK6AW103M	81349	913-1188-000
C6	CAPACITOR, FXD, MICA 0.022 UF, 2% TOL, 2000 VDCW	CM70B223GM1	81349	938-2129-000
C7	CAPACITOR, FXD, PAPER 12 UF, 10% TOL, 1500 VDCW	CP70E1EH126K1	81349	962-4246-000
C8	SAME AS C7			
C9	NOT USED			
C10	SAME AS C4			
R1 THROUGH R4	NOT USED			
R5	RESISTOR, FXD, WIRE-WOUND 330 OHMS, 5% TOL, 26 WATTS	RW33V331	81349	747-1790-000
R6	NOT USED			
R7	NOT USED			
R8	NOT USED			
R9	RESISTOR, FXD, WIRE-WOUND 0.25 OHMS, 1% TOL, 10 WATTS	RS1DX41DER2500F	91637	747-9451-000
R10	RESISTOR, FXD, WIRE-WOUND 2.5 OHMS, 3% TOL, 50 WATTS	RH50-2R500G	91637	747-8697-000
R11	RESISTOR, FXD, FILM 1200 OHMS, 5% TOL, 1 WATT	RL32S122J	81349	745-3946-000
R12	RESISTOR, FXD, FILM 3600 OHMS, 5% TOL, 1 WATT	RL32S362J	81349	745-3974-000
R13	SAME AS R11			
R14	RESISTOR, FXD, WIRE-WOUND 0.5 OHMS, 1% TOL, 36 WATTS	2K46C5-1PCT	44655	710-5076-030
R15	RESISTOR, FXD, WIRE-WOUND 4 OHMS, 10% TOL, 100 WATTS	3-1-2M45CE4	44655	710-5076-060
R16	RESISTOR, FXD, WIRE-WOUND 1 OHM, 1% TOL, 36 WATTS	2K46C1-1PCT	44655	710-5076-010
R17	NOT USED			
R18	NOT USED			
R19	NOT USED			
R20	RESISTOR, FXD, FILM 200 KILOHMS, 1% TOL, 2 WATTS	MEH200K1PCTT1	07716	705-1493-050
R21	SAME AS R20			
R22	SAME AS R20			
R23	SAME AS R20			
R24	RESISTOR, FXD, COMPOSITION 47 KILOHMS, 10% TOL, 1 WATT	RCR32G473KS	81349	745-3422-000
R25	NOT USED			
R26	NOT USED			
R27	NOT USED			
R28	RESISTOR, FXD, FILM 1000 KILOHMS, 1% TOL, 2 WATTS	RN80B1004F	81349	705-4254-000
R29	SAME AS R28			
R30	SAME AS R28			
R31	SAME AS R28			
R32	SAME AS R24			
R33 THROUGH R68	NOT USED			

www.SteamPoweredRadio.com

SYMBOL	DESCRIPTION	MANUFACTURER'S PART NUMBER	MFR CODE	COLLINS PART NUMBER
R69	RESISTOR, FXD, WIRE-WOUND 310 OHMS, 5% TOL, 14 WATTS	HL15-3100HMS5PCT	91637	747-0754-000
TB1 THROUGH TB6	NOT USED			
TB7	BOARD, TERMINAL			786-3126-001
VR1	NOT USED			
VR2	NOT USED			
VR3	DIODE	1N30168	99942	353-3121-000
VR4	SAME AS VR3			
Z1	NOT USED			
Z2	RECTIFIER	6-2-1B404S3X3	05277	353-0434-010

www.SteamPoweredRadio.com

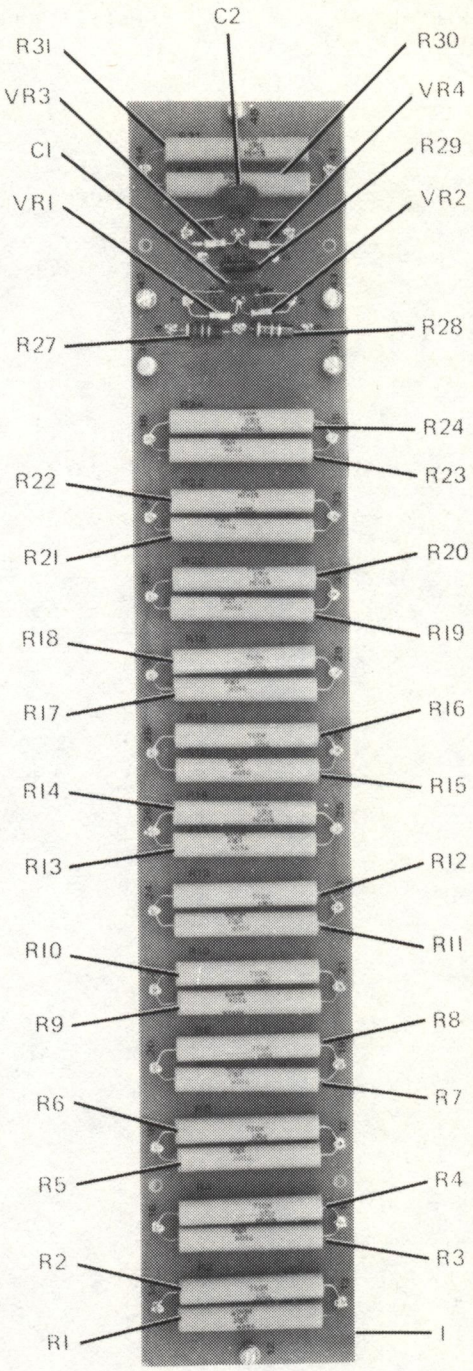

Figure 6-15. Metering Multiplier Board, A15.

www.SteamPoweredRadio.com

SYMBOL	DESCRIPTION	MANUFACTURER'S PART NUMBER	MFR CODE	COLLINS PART NUMBER
	METERING MULTIPLIER BOARD, A15			786-3168-001
C1	CAPACITOR, FXD, CERAMIC 0.01 UF, 20% TOL, 500 VDCW	CK63AW103M	81349	913-1188-000
C2	SAME AS C1			
R1	RESISTOR, FXD, FILM 750 KILOHMS, 1% TOL, 2 WATTS	MEH750K1PCTT2	07716	705-1493-020
R2 THROUGH R24	SAME AS R1			
R25	NOT USED			
R26	NOT USED			
R27	RESISTOR, FXD, COMPOSITION 47 KILOHMS, 10% TOL, 1 WATT	RCR32G473KS	81349	745-3422-000
R28	SAME AS R27			
R29	RESISTOR, FXD, FILM 5110 OHMS, 1% TOL, 1/2 WATT	RN65D5111F	81349	705-7130-000
R30	RESISTOR, FXD, FILM 1000 KILOHMS, 1% TOL, 2 WATTS	RN80B1004F	81349	705-4254-000
R31	SAME AS R30			
VR1	DIODE	1N3044A	06751	353-1339-000
VR2	SAME AS VR1			
VR3	SAME AS VR1			
VR4	SAME AS VR1			
1	BOARD, TERMINAL			786-3015-001

www.SteamPoweredRadio.com

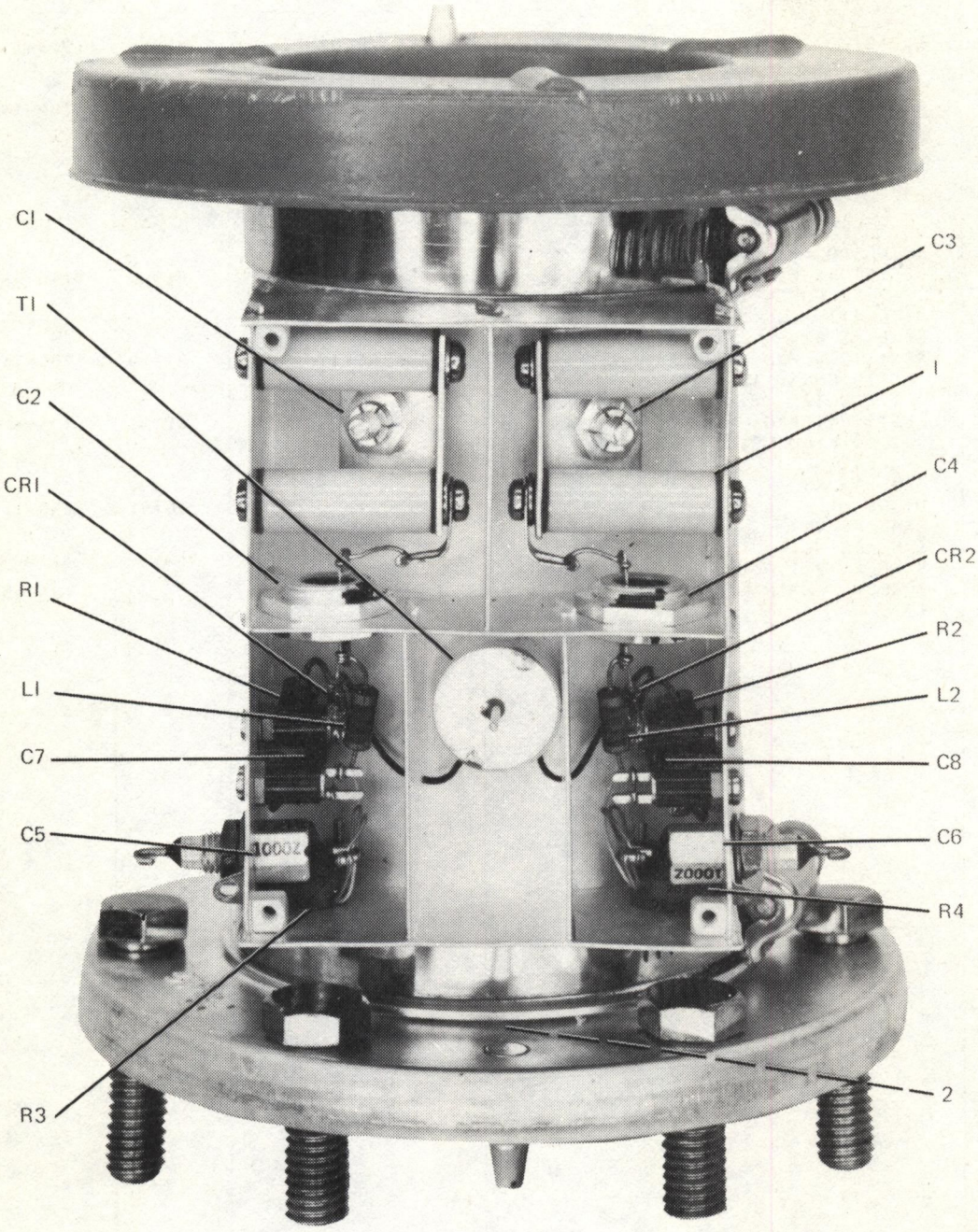

Figure 6-16. Directional Coupler, A16.

If You Didn't Get This From My Site,
Then It Was Stolen From....
www.SteamPoweredRadio.com

SYMBOL	DESCRIPTION	MANUFACTURER'S PART NUMBER	MFR CODE	COLLINS PART NUMBER
	DIRECTIONAL COUPLER, A16			786-3264-001
C1	CAPACITOR			786-3059-001
C2	CAPACITOR, FXD, MICA 250 PF, 2% TOL, 1000 VDCW	66901314A0-251G	72982	912-4133-030
C3	SAME AS C1			
C4	SAME AS C2			
C5	CAPACITOR, FXD, CERAMIC 1000 PF, PLUS 80% MINUS 20%, 500 VDCW	327-029X5T01027	72982	913-1292-000
C6	SAME AS C5			
C7	CAPACITOR, FXD, MICA 10 PF, 10% TOL, 500 VDCW	DM15C100K500WV4C R	72136	912-2754-000
C8	SAME AS C7			
CR1	DIODE	1N5711	07688	353-3691-010
CR2	SAME AS CR1			
L1	COIL, RF 3.3 MH, 10% TOL	MS18130-14	81349	240-0791-000
L2	SAME AS L1			
R1	RESISTOR, FXD, COMPOSITION 33 OHMS, 10% TOL, 3/4 WATT	RCR32G330KS	81349	745-3288-000
R2	SAME AS R1			
R3	RESISTOR, VAR, WIRE-WOUND 20 KILOHMS, 5% TOL, 3/4 WATT	RT22C2L203	81349	381-1721-160
R4	SAME AS R3			
T1	TOROID			786-3075-001
1	STANDOFF, INSULATOR -QTY 4-	E1706	70371	190-1144-000
2	CONNECTOR ASSY, ELECTRICAL	15093	35844	013-1876-020

www.SteamPoweredRadio.com

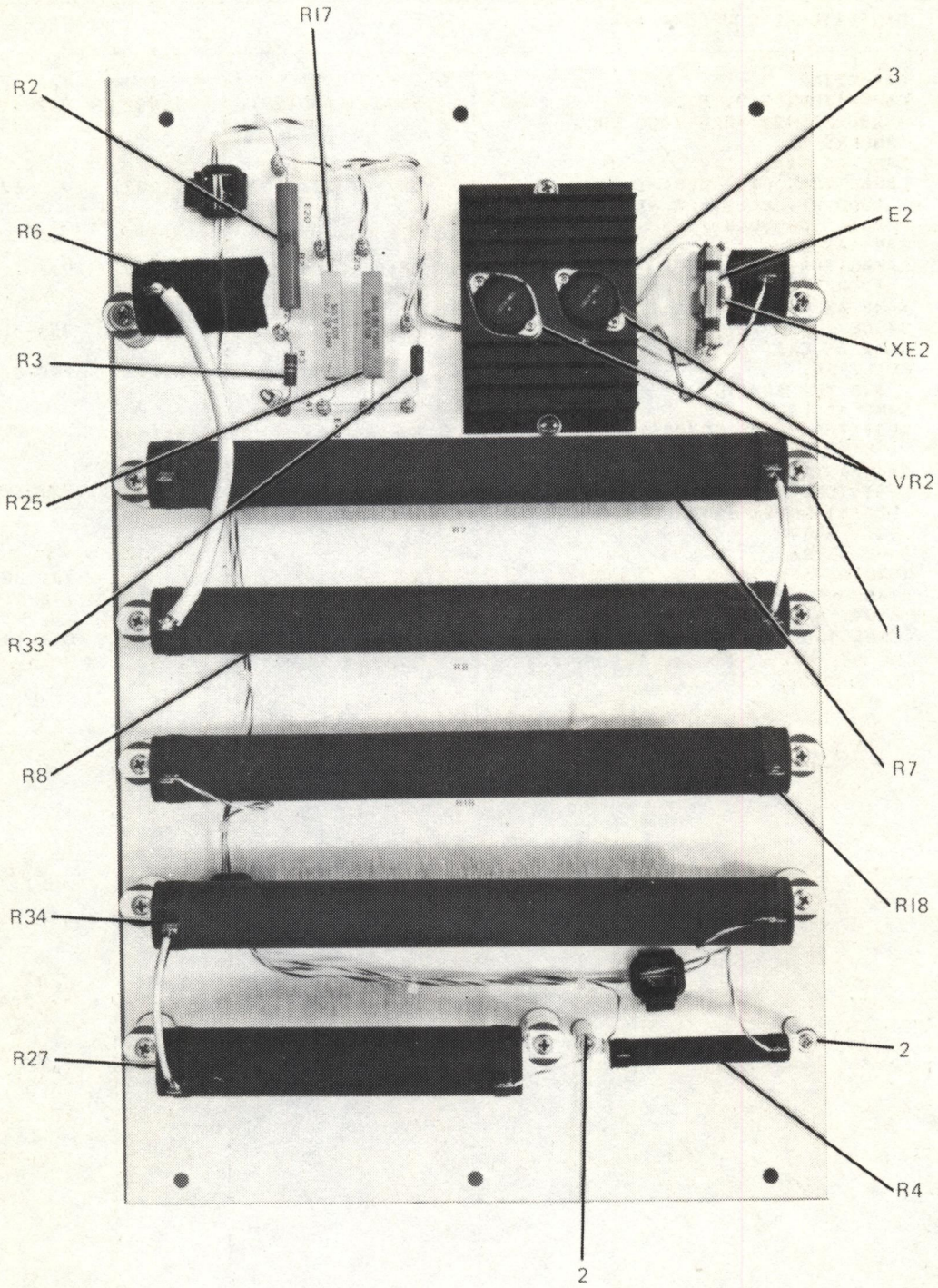

Figure 6-17. Bleeder Resistor Panel, A17.

www.SteamPoweredRadio.com

SYMBOL	DESCRIPTION	MANUFACTURER'S PART NUMBER	MFR CODE	COLLINS PART NUMBER
	BLEEDER RESISTOR PANEL, A17			786-3154-001
E1	NOT USED			
E2	ARRESTOR, LIGHTNING	16A	ASSOC	013-1332-020
R1	NOT USED			
R2	RESISTOR, FXD, FILM 400 KILOHMS, 1% TOL, 2 WATTS	MF9AD4003F	19701	705-1457-210
R3	RESISTOR, FXD, COMPOSITION 47 KILOHMS, 10% TOL, 1 WATT	RCR32G473KS	81349	745-3422-000
R4	RESISTOR, FXD, WIRE-WOUND 330 OHMS, 5% TOL, 26 WATTS	RW33V331	81349	747-1790-000
R5	NOT USED			
R6	RESISTOR, FXD, WIRE-WOUND 18 OHMS, 5% TOL, 210 WATTS	RW47V180	81349	746-6662-000
R7	RESISTOR, FXD, WIRE-WOUND 100 KILOHMS, 5% TOL, 210 WATTS	RW47V104	81349	746-6737-000
R8	SAME AS R7			
R9 THROUGH R16	NOT USED			
R17	RESISTOR, FXD, WIRE-WOUND 200 OHMS, 10% TOL, 10 WATTS	PW1020010PCT	11502	710-9054-000
R18	RESISTOR, FXD, COMPOSITION 39 KILOHMS, 5% TOL, 1 WATT	GBT1-39K5	75042	745-6817-000
R19 THROUGH R24	NOT USED			
R25	RESISTOR, FXD, WIRE-WOUND 20 KILOHMS, 10% TOL, 10 WATTS	PW1020K10PCT	11502	710-9067-000
R26	NOT USED			
R27	RESISTOR, FXD, WIRE-WOUND 82 KILOHMS, 5% TOL, 113 WATTS	RW37V823	81349	747-3834-000
R28 THROUGH R32	NOT USED			
R33	RESISTOR, FXD, WIRE-WOUND 10 OHMS, 1% TOL, 26 WATTS	RW33V100	91637	747-1646-000
R34	RESISTOR, FXD, WIRE-WOUND 20 KILOHMS, 5% TOL, 210 WATTS	RW47V203	81349	746-6723-000
VR1	NOT USED			
VR2	SEMICONDUCTOR DEVICE, SET	50M140Z85	04713	353-6015-000
XE1	NOT USED			
XE2	ARRESTOR, LIGHTNING, MTG	53	ASSOC	013-1332-010
1	STANDOFF, INSULATOR -QTY 12-	3BX3822	71590	190-0025-000
2	STANDOFF, INSULATOR -QTY 2-	E1708	70371	190-1145-000
3	HEAT SINK	1E115583033	41197	352-9866-000

www.SteamPoweredRadio.com

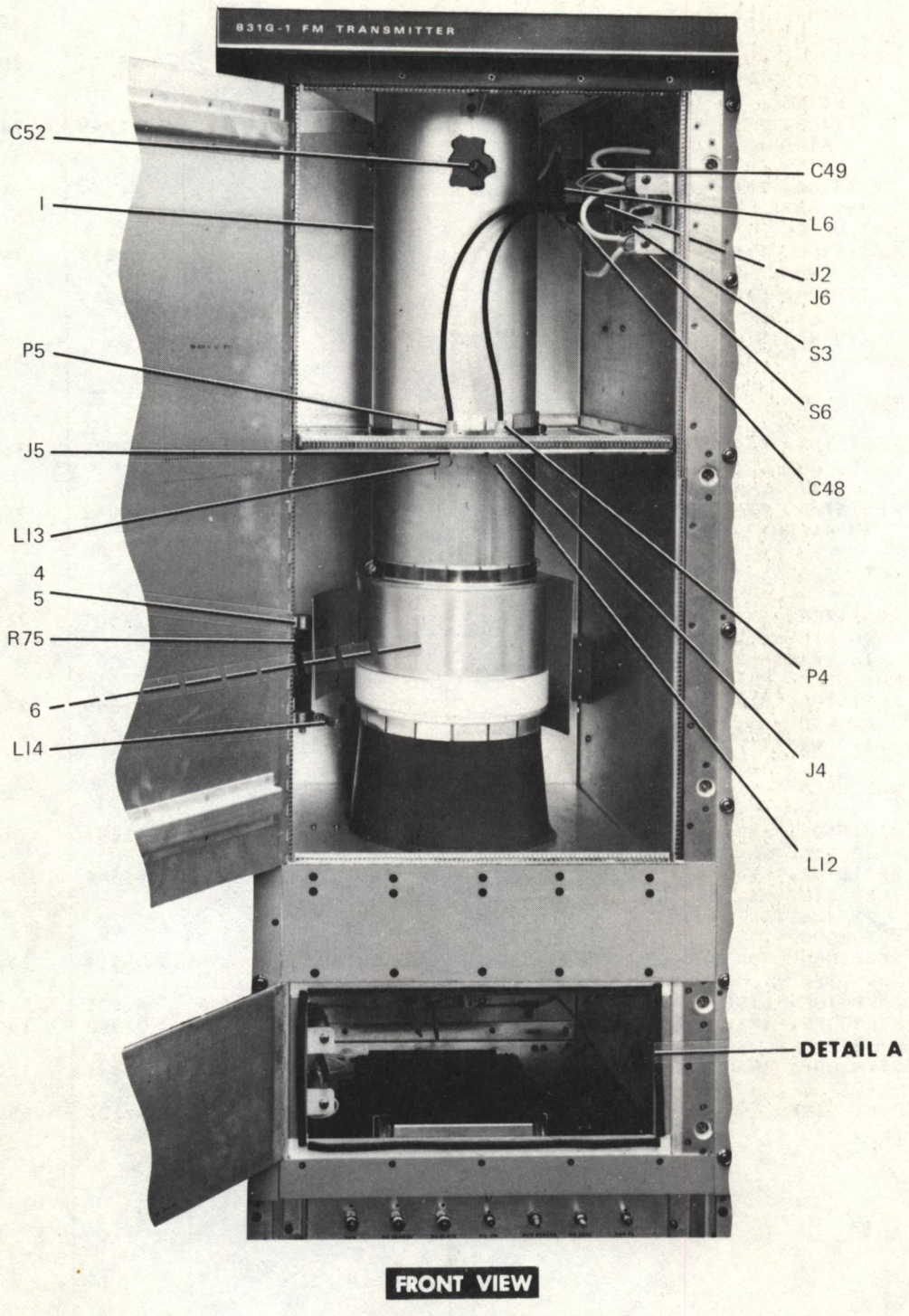

Figure 6-18. Power Amplifier Cavity, A18 (Sheet 1 of 3).

www.SteamPoweredRadio.com

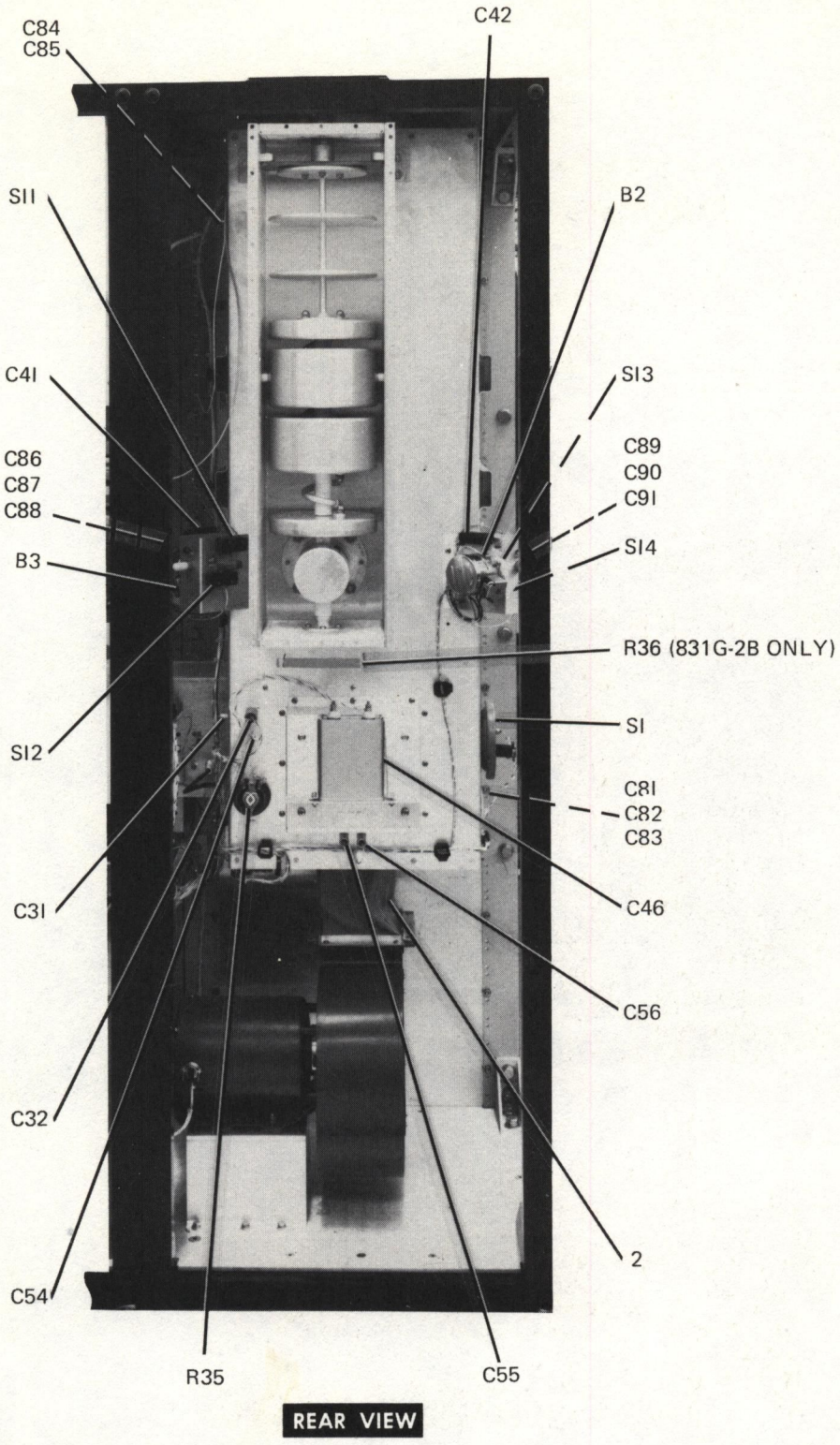

Figure 6-18. Power Amplifier Cavity, A18 (Sheet 2 of 3).

If You Didn't Get This From My Site,
Then It Was Stolen From....
www.SteamPoweredRadio.com

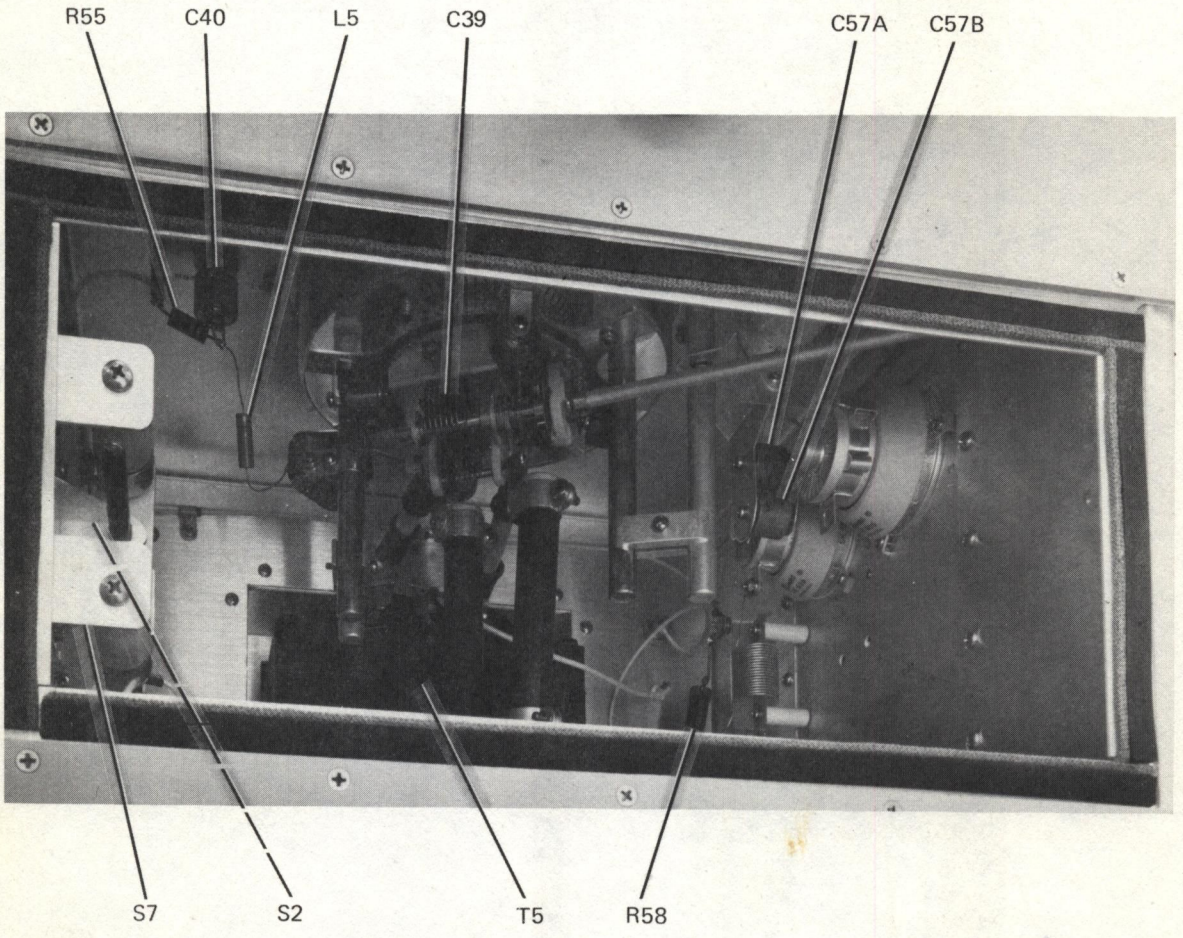

Figure 6-18. Power Amplifier Cavity, A18 (Sheet 3 of 3).

www.SteamPoweredRadio.com

SYMBOL	DESCRIPTION	MANUFACTURER'S PART NUMBER	MFR CODE	COLLINS PART NUMBER
	POWER AMPLIFIER CAVITY, A18			786-3335-001
B1	NOT USED			
B2	MOTOR, AC 115 VAC	PCDA1	10108	230-0581-010
B3	SAME AS B2			
C1 THROUGH C30	NOT USED			
C31	CAPACITOR, FXD, CERAMIC 1000 PF, 20% TOL, 4000 VDCW	2498-002X50-102M	72982	913-3120-020
C32	CAPACITOR, FXD, PAPER 0.1 UF, PLUS 30% MINUS 20%, 1250 VDCW	JN17-304A	56289	241-0334-000
C33 THROUGH C39	NOT USED			
C40	CAPACITOR, FXD, CERAMIC 310 PF, 5% TOL, 2500 VDCW	850S310N	71590	913-0845-000
C41	CAPACITOR, FXD, PAPER 0.47 UF, 20% TOL, 400 VDCW	160P47404	56289	913-6849-000
C42	SAME AS C41			
C43	NOT USED			
C44	NOT USED			
C45	NOT USED			
C46	CAPACITOR, FXD, PAPER	T10100	93790	930-0038-000
C47	NOT USED			
C48	CAPACITOR, FXD, CERAMIC 500 PF, PLUS 50% MINUS 20%, 20,000 VDCW	HV50020KV	96095	913-110100
C49	SAME AS C48			
C50	NOT USED			
C51	NOT USED			
C52	CAPACITOR, FXD, CERAMIC 100 PF, 10% TOL, 15,000 VDCW	857-100N	71590	913-5113-050
C53	NOT USED			
C54	CAPACITOR, FXD, CERAMIC 1000 PF, 20% TOL, 1000 VDCW	2432002X5S0102M	72982	913-4843-000
C55	CAPACITOR, FXD, PAPER 0.1 UF, 10% TOL, 600 VDCW	CZ24BKF104	81349	241-0090-000
C56	SAME AS C55			
C57A	CAPACITOR, FXD, CERAMIC 100 PF, 10% TOL, 5000 VDCW	850S100N	71590	913-0821-000
C57B	SAME AS C57A			
C58 THROUGH C80	NOT USED			
C81	CAPACITOR, FXD, CERAMIC 1000 PF, 20% TOL, 600 VDCW	DA858-003	71590	913-0101-000
C82	CAPACITOR, FXD, CERAMIC	CK70AW102M	81349	913-4064-000
C83	NOT USED			
C84	NOT USED			
C85	NOT USED			
C86	CAPACITOR, FXD, CERAMIC 0.1 UF, PLUS 80% MINUS 20%, 500 VDCW	41C92	56289	913-3152-000
C87 THROUGH C91	SAME AS C86			
J1	NOT USED			
J2	CONNECTOR, ELECTRICAL 1 CONTACT	100B3000C75	94375	357-9248-010
J3	NOT USED			
J4	CONNECTOR, ELECTRICAL 1 CONTACT	UG625BU	80058	357-9670-000

www.SteamPoweredRadio.com

SYMBOL	DESCRIPTION	MANUFACTURER'S PART NUMBER	MFR CODE	COLLINS PART NUMBER
J5	SAME AS J4			
J6	SAME AS J2			
L1 THROUGH L4	NOT USED			
L5	COIL, RF 4.7 UH	240-0178-000	82142	240-0178-000
L6	CHOKE, RF			786-3548-001
L7 THROUGH L11	NOT USED			
L12	FERRULE, RF, GROUNDING	GSB165	59730	304-0160-000
L13	SAME AS L12			
L14	CHOKE, RF			786-3673-001
P1	NOT USED			
P2	NOT USED			
P3	NOT USED			
P4	CONNECTOR, ELECTRICAL 1 CONTACT	UG88EU	80058	357-9292-000
P5	SAME AS P4			
R1 THROUGH R34	NOT USED			
R35	RESISTOR, FXD, WIRE-WOUND 10 KILOHMS, 10% TOL, 50 WATTS	RP151SD103KK	81349	749-1032-000
	RESISTOR, VAR, WIRE-WOUND 1000 OHMS, 10% TOL, 50 WATTS -USED ON 831G-2B-	M22-05-00231SD	81349	749-1026-000
R36	RESISTOR, FXD, WIRE-WOUND 3000 OHMS, 5% TOL, 80 WATTS -USED ON 831G-2B ONLY-	0613	44655	710-9294-000
R37 THROUGH R54	NOT USED			
R55	RESISTOR, FXD, COMPOSITION 22 OHMS, 10% TOL, 2 WATTS	RC42GF220K	81349	745-5582-000
R56	NOT USED			
R57	NOT USED			
R58	RESISTOR, FXD, COMPOSITION 22 OHMS, 20% TOL, 15 WATTS	772SP2	10646	712-0002-000
R59 THROUGH R74	NOT USED			
R75	RESISTOR, FXD, COMPOSITION 50 OHMS, 20% TOL, 60 WATTS	218SP9	10646	712-0070-000
S1	SWITCH, PRESSURE SPDT CONTACT ARRANGEMENT	146B	96502	266-8384-090
S2	SWITCH, SENSITIVE SPDT CONTACT ARRANGEMENT INCLUDES	MS25253-4	96906	260-0025-000
	ACTUATOR	JV9	91929	260-0026-000
S3	SAME AS S2			
S4	NOT USED			
S5	NOT USED			
S6	SHORTING SWITCH INCLUDES			786-3156-001
	SPRING, SHORTING SWITCH			540-5342-002
	STRAP, GROUNDING			542-1768-002
	STRIP, SHORTING			542-1770-002
	CONTACT, SHORTING			542-1773-002
	SHAFT, FLAT, STRAIGHT			542-2242-003
	INSULATOR, STANDOFF	3BX3841	71590	190-0026-000
S7	SAME AS S6			
S8	NOT USED			
S9	NOT USED			
S10	NOT USED			
S11	SWITCH, SENSITIVE SPDT CONTACT ARRANGEMENT	SS05A20	81350	266-3081-000
S12	SAME AS S11			
S13	SAME AS S11			
S14	SAME AS S11			

www.SteamPoweredRadio.com

SYMBOL	DESCRIPTION	MANUFACTURER'S PART NUMBER	MFR CODE	COLLINS PART NUMBER
T1 THROUGH T4	NOT USED			
T5	TRANSFORMER, POWER	3-18294	70674	662-0418-010
1	CONDUCTOR, CENTER, CAVITY			786-3124-001
2	DUCT, BLOWER			786-3026-001
3	SHIELD, RF			786-3095-001
4	CERAMIC POST -QTY 2-			190-0017-000
5	CLAMP -QTY 2-			516-6730-001
6	TUBE CLIP			265-9020-000

D 2041 (9 65)

www.SteamPoweredRadio.com

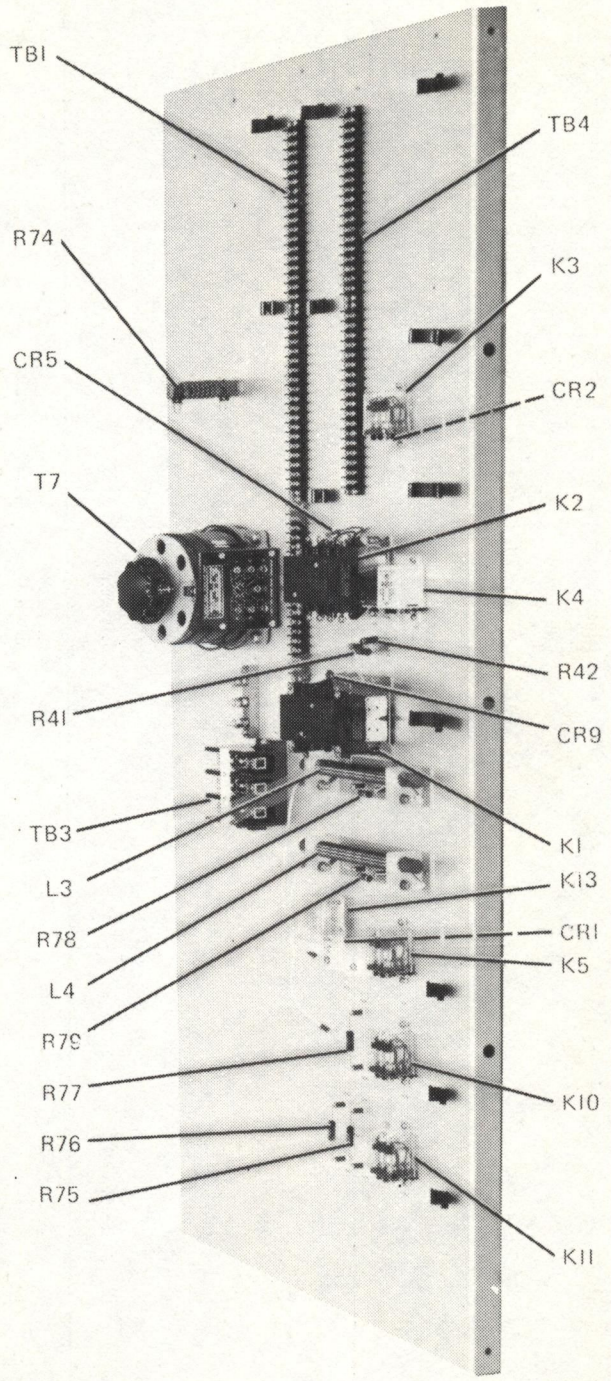

8700 396 Pb

Figure 6-19. Input Terminal Panel, A19.

www.SteamPoweredRadio.com

SYMBOL	DESCRIPTION	MANUFACTURER'S PART NUMBER	MFR CODE	COLLINS PART NUMBER
	INPUT TERMINAL PANEL, A19			786-3333-001
CR1	DIODE	1N645	14433	353-2607-000
CR2	SAME AS CR1			
CR3	NOT USED			
CR4	NOT USED			
CR5	SAME AS CR1			
CR6 THROUGH CR8	NOT USED			
CR9	SAME AS CR1			
K1	RELAY, CONTACTOR 3A CONTACT ARRANGEMENT	2160B430QA3-4-22 -41XB1860	52090	401-1607-000
K2	RELAY, MAGNETIC 1C CONTACT ARRANGEMENT	2195R50QAXR1920	52090	401-1614-000
K3	RELAY, ARMATURE 3C CONTACT ARRANGEMENT	KUP14D5124V	77342	970-0007-250
K4	RELAY, TIME DELAY 2C CONTACT ARRANGEMENT	CUC43-30120	77342	402-0489-490
K5	RELAY, ARMATURE 3C CONTACT ARRANGEMENT	KUP14A51240V	77342	970-0007-270
K6 THROUGH K9	NOT USED			
K10	SAME AS K5			
K11	SAME AS K5			
K12	NOT USED			
K13	RELAY, ARMATURE	93-502333-23300B	80089	970-2454-270
L1	NOT USED			
L2	NOT USED			
L3	INDUCTOR			786-3677-001
L4	SAME AS L3			
R1 THROUGH R40	NOT USED			
R41	RESISTOR, FXD, COMPOSITION 820 OHMS, 10% TOL, 2 WATTS	RC42GF821K	81349	745-5649-000
R42	SAME AS R41			
R43 THROUGH R73	NOT USED			
R74	RESISTOR, FXD, WIRE-WOUND 0.5 OHMS, 10% TOL, 100 WATTS	3-1-2M45C5	44655	710-5076-050
R75	RESISTOR, FXD, COMPOSITION 500 OHMS, 20% TOL, 60 WATTS	218SP9	10646	712-0070-000
R76	SAME AS R75			
R77	SAME AS R75			
R78	RESISTOR, FXD, COMPOSITION 470 OHMS, 10% TOL, 2 WATTS	RCR42G471KS	81349	745-5638-000
R79	SAME AS R78			
T1 THROUGH T6	NOT USED			
T7	TRANSFORMER, PWR, VARIABLE	225U	58474	664-4020-020
TB1	BOARD, TERMINAL 18 TERMINALS -QTY 3-	18-141	71785	367-4180-000
TB2	NOT USED			
TB3	BOARD, TERMINAL 6 TERMINALS	9080U3	56365	367-1188-000
TB4	BOARD, TERMINAL 18 TERMINALS -QTY 2-	18-141	71785	367-4180-000
1	SOCKET, RELAY	93-153-1	80089	220-1399-010
2	BRACKET, RELAY			625-8371-001

www.SteamPoweredRadio.com

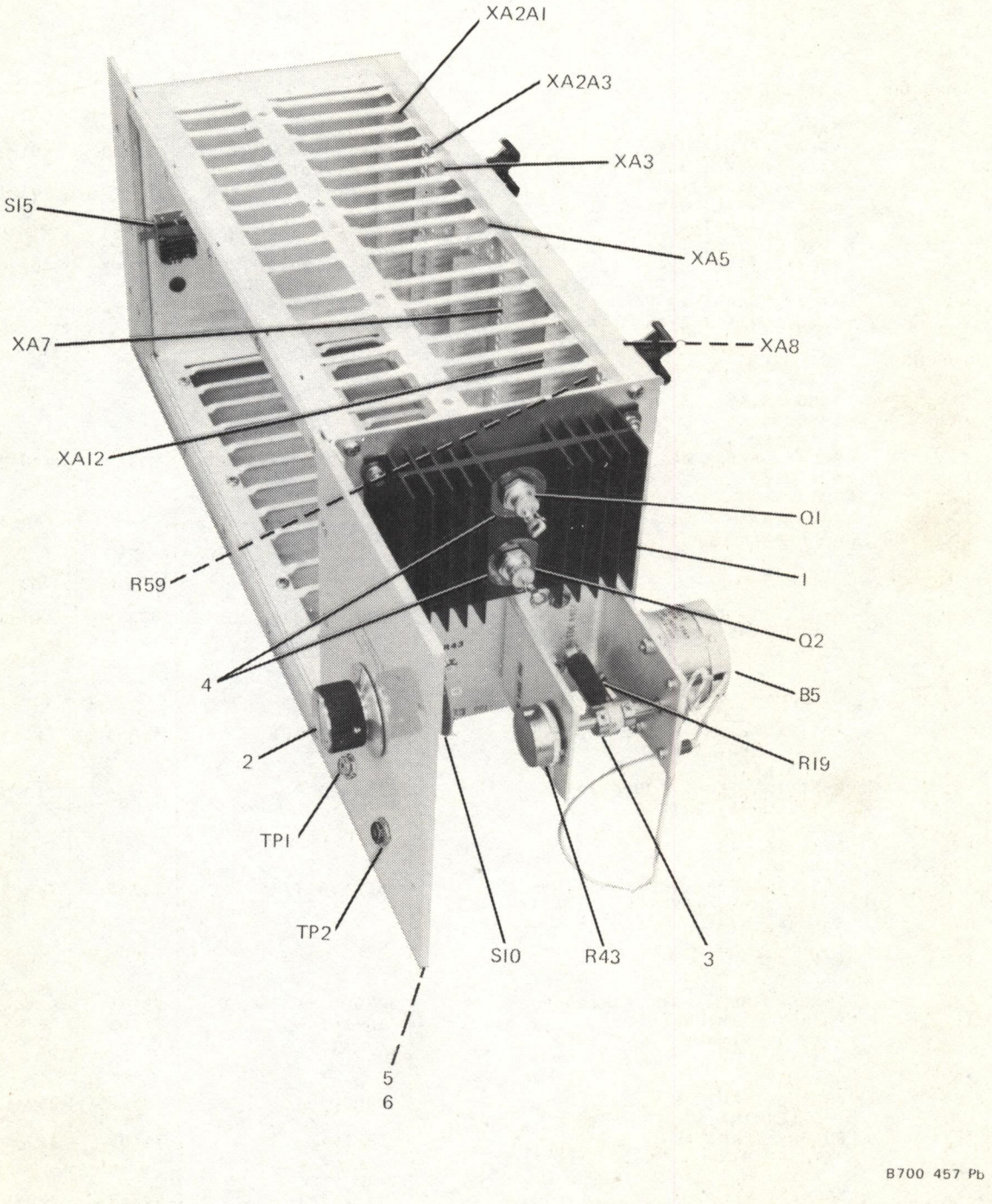

Figure 6-20. Card Cage Assembly, A20.

www.SteamPoweredRadio.com

SYMBOL	DESCRIPTION	MANUFACTURER'S PART NUMBER	MFR CODE	COLLINS PART NUMBER
	CARD CAGE ASSEMBLY, A20			786-3301-001
B1 THROUGH B4	NOT USED			
B5	MOTOR	J6322	82227	230-0515-000
Q1	DIODE	NL461E	83781	353-3490-090
Q2	SAME AS Q1			
R1 THROUGH R18	NOT USED			
R19	RESISTOR, FXD, WIRE-WOUND 100 OHMS, 5% TOL, 11 WATTS	RW29V101	81349	746-6060-000
R20 THROUGH R42	NOT USED			
R43	RESISTOR, VAR, COMPOSITION 250 OHMS, 10% TOL, 2 WATTS	RV4NAYSD254A	81349	380-2678-000
R44 THROUGH R58	NOT USED			
R59	RESISTOR, FXD, COMPOSITION 820 OHMS, 10% TOL, 1/2 WATT	RCR20G821KS	81349	745-1349-000
S1 THROUGH S9	NOT USED			
S10	SWITCH, ROTARY DPDT CONTACT ARRANGEMENT	262344K1	76854	259-2694-010
S11 THROUGH S14	NOT USED			
S15	SWITCH, INTERLOCK SPDT CONTACT ARRANGEMENT	MS16106-4	96906	266-8000-000
TP1	JACK, TIP RED	M39024-1-22	81349	360-0439-120
TP2	JACK, TIP BLACK	M39024-1-23	81349	360-0439-130
XA1	NOT USED			
XA2	NOT USED			
XA2A1	CONNECTOR, ELECTRICAL 4 CONTACTS -QTY 10-	375430904501	91662	372-2425-040
XA2A2	NOT USED			
XA2A3	CONNECTOR, ELECTRICAL 4 CONTACTS -QTY 5-	375430904501	91662	372-2425-040
XA3	CONNECTOR, ELECTRICAL 4 CONTACTS -QTY 11-	375430904501	91662	372-2425-040
XA4	NOT USED			
XA5	SAME AS XA2A1			
XA6	NOT USED			
XA7	CONNECTOR, ELECTRICAL 4 CONTACTS -QTY 13-	375430904501	91662	372-2425-040
XA8	SAME AS XA2A3			
XA9	NOT USED			
XA10	NOT USED			
XA11	NOT USED			
XA12	SAME AS XA2A1			
1	HEAT SINK	64037B	13103	352-9597-030
2	KNOB, ALUMINUM			757-0233-003
3	COUPLING, SHAFT, FLEXIBLE	A201-5N	99934	015-0514-000
4	KIT, MOUNTING -QTY 2-	PK22-31M	08289	352-9573-020
5	PLASTIC FASTENER FOR COVER			769-0532-003
6	PINS FOR COVER			311-0438-000

www.SteamPoweredRadio.com

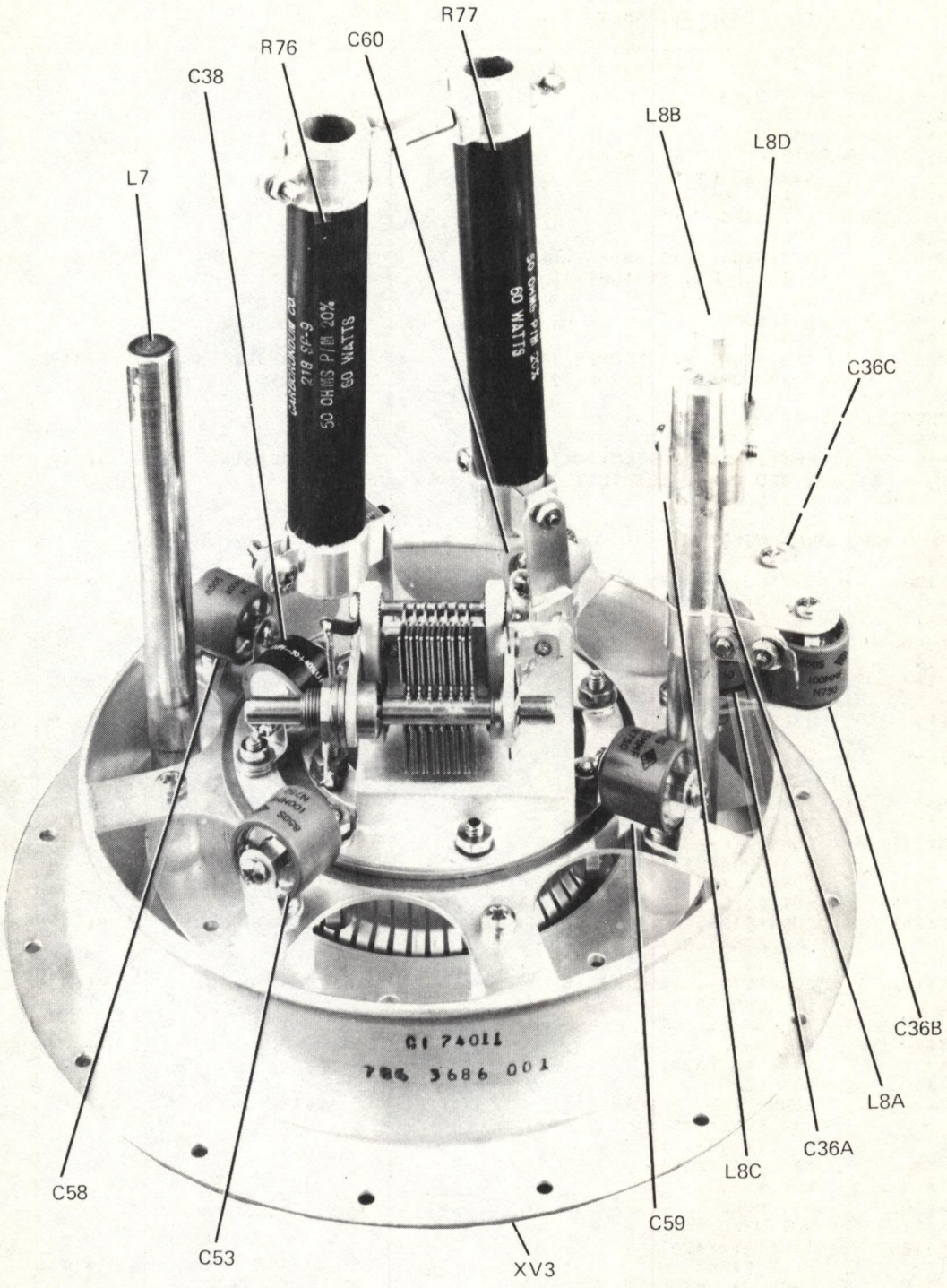

Figure 6-21. Power Amplifier Socket, A21.

If You Didn't Get This From My Site,
Then It Was Stolen From....
www.SteamPoweredRadio.com

SYMBOL	DESCRIPTION	MANUFACTURER'S PART NUMBER	MFR CODE	COLLINS PART NUMBER
	POWER AMPLIFIER SOCKET, A21			786-3686-001
C1 THROUGH C35	NOT USED			
C36A	CAPACITOR, FXD, CERAMIC 100 PF, 10% TOL, 5000 VDCW	850S100N	71590	913-0821-000
C36B	SAME AS C36A			
C36C	SAME AS C36A			
C37	NOT USED			
C38	CAPACITOR, FXD, CERAMIC 1000 PF, PLUS 40% MINUS 20%, 2500 VDCW	HPB20-BC1000PF	96095	913-2831-000
C39 THROUGH C52	NOT USED			
C53	SAME AS C36A			
C54 THROUGH C57	NOT USED			
C58	SAME AS C36A			
C59	CAPACITOR, FXD, CERAMIC 75 PF, 5% TOL, 3500 VDCW	850S75Z	71950	913-0830-000
C60	CAPACITOR, FXD, CERAMIC 500 PF, 20% TOL, 5000 VDCW	858-500	71590	913-5113-250
R1 THROUGH R75	NOT USED			
R76	RESISTOR, FXD, COMPOSITION 50 OHMS, 20% TOL, 6 WATTS	218SP9	10646	712-0070-000
R77	SAME AS R76			
L1 THROUGH L6	NOT USED			
L7	DRIVER PLATE INDUCTOR INCLUDES ROD			786-3110-002
L8	DRIVER LOADING INDUCTOR INCLUDES ROD			786-3110-002
	-A- ROD			786-3110-006
	-B- BAR			786-3283-002
	-C- BAR			786-3283-001
	-D-			
XV1	NOT USED			
XV2	NOT USED			
XV3	SOCKET, ELECTRON TUBE	Y291	06980	220-1491-000

D 20.

www.SteamPoweredRadio.com

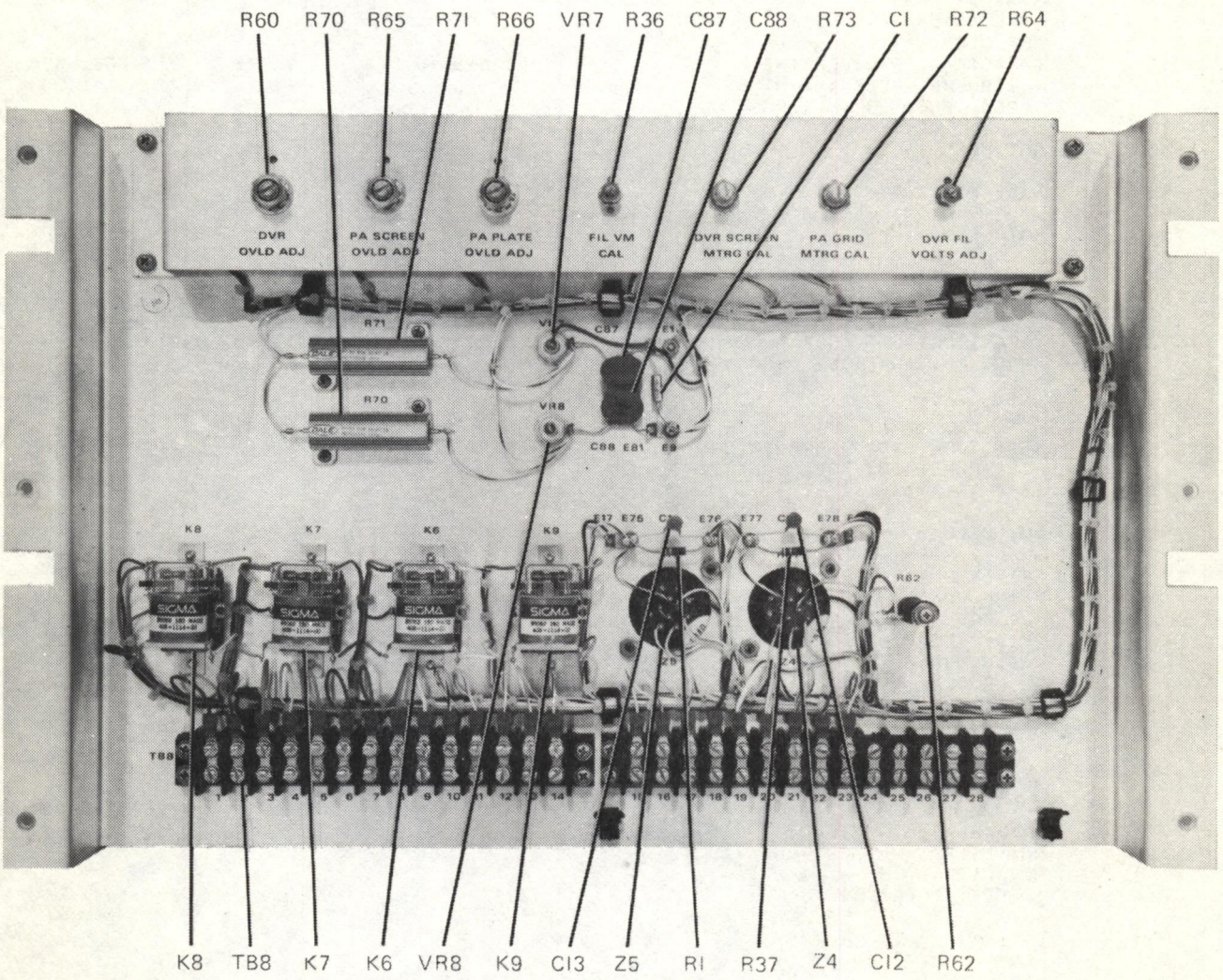

Figure 6-22. Overload and Meter Calibrate Panel, A22.

www.SteamPoweredRadio.com

SYMBOL	DESCRIPTION	MANUFACTURER'S PART NUMBER	MFR CODE	COLLINS PART NUMBER
	OVERLOAD AND METER CALIBRATE PANEL, A22			786-3666-001
C1	CAPACITOR, FXD, ELECTROLYTIC 33 UF, 20% TOL, 10 VDCW	150D336X001082	56289	184-7382-000
C2 THROUGH C11	NOT USED			
C12	CAPACITOR, FXD, CERAMIC 1000 PF, 20% TOL, 1000 VDCW	CK60AW102M	81239	913-1136-000
C13	SAME AS C12			
C14 THROUGH C86	NOT USED			
C87	CAPACITOR, FXD, CERAMIC 0.1 UF, PLUS 80% MINUS 20%, 200 VDCW	825-213X5V0104Z	72982	913-3681-000
C88	SAME AS C87			
K1 THROUGH K5	NOT USED			
K6	RELAY, ARMATURE 1C CONTACT ARRANGEMENT	95062	78277	408-1114-000
K7	SAME AS K6			
K8	SAME AS K6			
K9	SAME AS K6			
R1	RESISTOR, FXD, COMPOSITION 1000 OHMS, 10% TOL, 1/2 WATT	RCR20G102KS	81349	745-1352-000
R2 THROUGH R35	NOT USED			
R36	RESISTOR, FXD, COMPOSITION 25 KILOHMS, 10% TOL, 1/2 WATT	RV6LAYSA253A	81349	380-2292-000
R37	RESISTOR, FXD, COMPOSITION 1000 OHMS, 10% TOL, 1/2 WATT -USED ON 831G-2-	RCR20G102KS	81349	745-1352-000
	RESISTOR, FXD, WIRE-WOUND 10 OHMS, 5% TOL, 3 WATTS -USED ON 831G-2B-	RW69V100	81349	747-5230-000
R38 THROUGH R59	NOT USED			
R60	RESISTOR, VAR, WIRE-WOUND 50 OHMS, 10% TOL, 2 WATTS			377-0619-000
R61	NOT USED			
R62	RESISTOR, FXD, WIRE-WOUND 150 OHMS, 5% TOL, 1 WATT	RW29V151	81349	746-6145-000
R63	NOT USED			

www.SteamPoweredRadio.com

SYMBOL	DESCRIPTION	MANUFACTURER'S PART NUMBER	MFR CODE	COLLINS PART NUMBER
R64	RESISTOR, VAR, WIRE-WOUND 100 OHMS, 10% TOL, 12.5 WATTS	44968-100	44655	749-4512-000
R65	SAME AS R60			
R66	SAME AS R60			
R67	NOT USED			
R68	NOT USED			
R69	NOT USED			
R70	RESISTOR, FXD, WIRE-WOUND 60.4 OHMS, 1% TOL, 30 WATTS	RE75G60R4	81349	747-0990-730
R71	SAME AS R70			
R72	RESISTOR, VAR, WIRE-WOUND 30 OHMS, 10% TOL, 4 WATTS	M30PX	37942	377-0032-000
R73	SAME AS R72			
TB1 THROUGH TB7	NOT USED			
TB8	BOARD, TERMINAL 14 TERMINALS	14-141	71785	367-4140-000
VR1 THROUGH VR6	NOT USED			
VR7	DIODE	1N1547	81483	353-1849-000
VR8	SAME AS VR7			
Z1	NOT USED			
Z2	NOT USED			
Z3	NOT USED			
Z4	MAGNETIC CIRCUIT, HALLTRON	MC103	12066	270-0080-020
Z5	SAME AS Z4			

www.SteamPoweredRadio.com

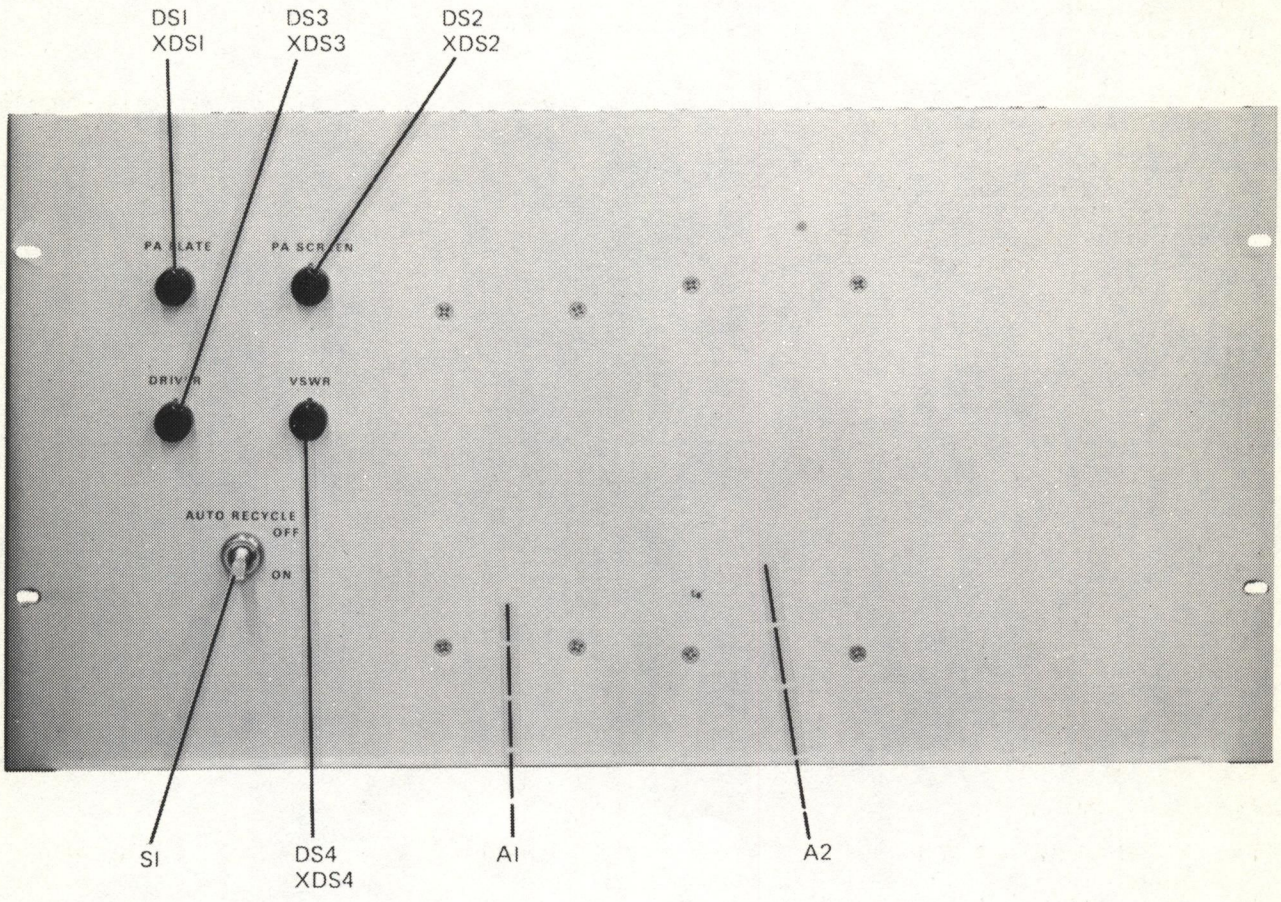

B700 3087 Pb

Figure 6-23. Fault Tally and Automatic Recycle Panel, A24.

www.SteamPoweredRadio.com

SYMBOL	DESCRIPTION	MANUFACTURER'S PART NUMBER	MFR CODE	COLLINS PART NUMBER
	FAULT TALLY AND AUTOMATIC RECYCLE PANEL, A24			627-5129-001
A1	FAULT TALLY CARD SEE BREAKDOWN ON PAGE 6-69			627-5113-001
A2	AUTO RECYCLE CARD SEE BREAKDOWN ON PAGE 6-71			627-6602-001
DS1	LAMP, INCANDESCENT	MS18209-387	96906	262-0179-010
DS2	SAME AS DS1			
DS3	SAME AS DS1			
DS4	SAME AS DS1			
S1	SWITCH, TOGGLE	81024GB	04009	260-2344-000
XDS1	LIGHT, INDICATOR RED	183-9730-1431-602	72619	262-2555-000
XDS2	SAME AS XDS1			
XDS3	SAME AS XDS1			
XDS4	SAME AS XDS1			

www.SteamPoweredRadio.com

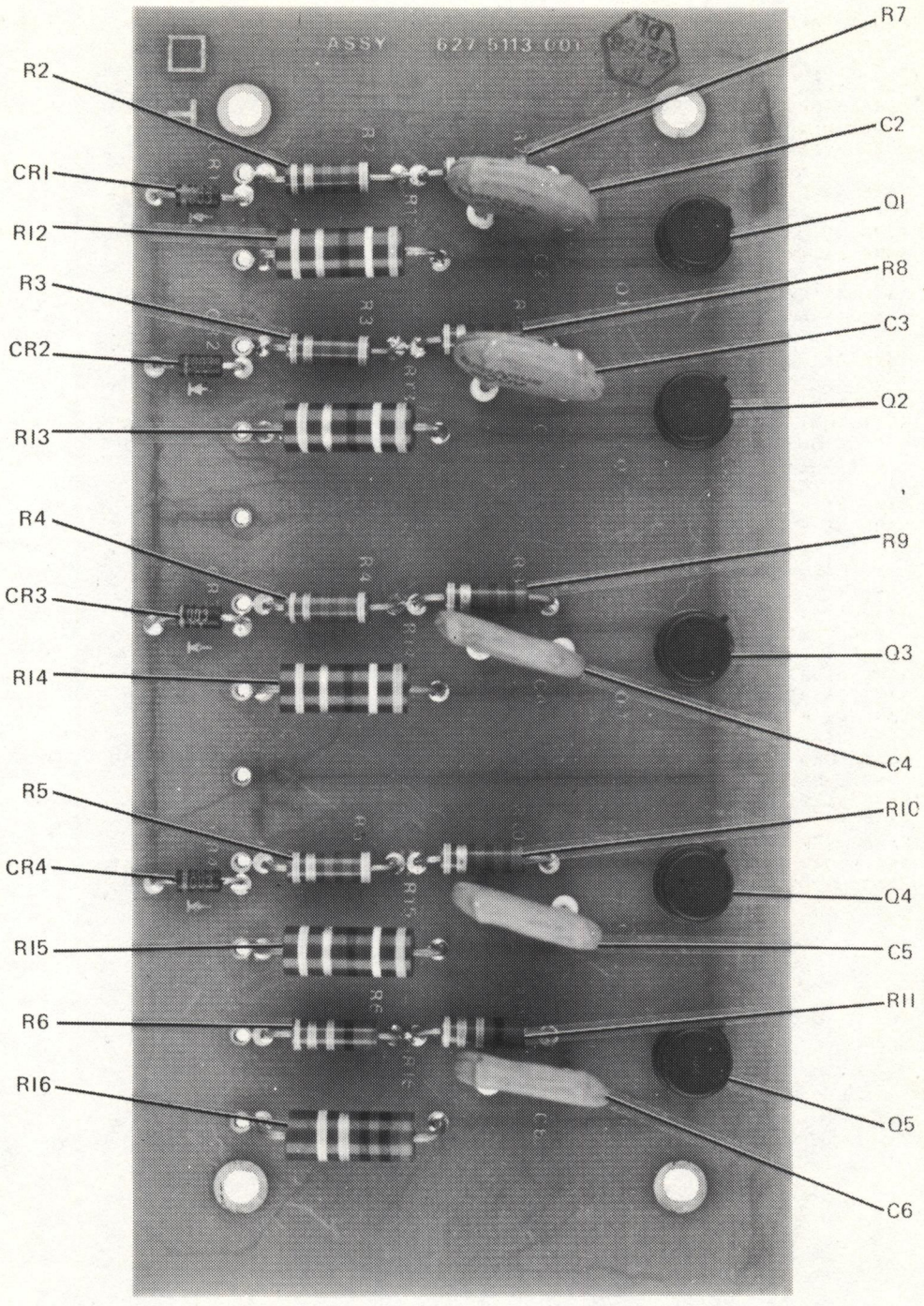

8700 3089 Pb

Figure 6-24. Fault Tally Card, A24A1.

www.SteamPoweredRadio.com

SYMBOL	DESCRIPTION	MANUFACTURER'S PART NUMBER	MFR CODE	COLLINS PART NUMBER
	FAULT TALLY CARD, A24A1			627-5113-001
C1	NOT USED			
C2	CAPACITOR, FXD, CERAMIC 0.1 UF, PLUS 80% MINUS 20% 200 VDCW	825-213X5V0104Z	72982	913-3681-000
C3 THROUGH C6	SAME AS C2			
CR1	DIODE	1N4003	07688	353-6442-030
CR2	SAME AS CR1			
CR3	SAME AS CR1			
CR4	SAME AS CR1			
Q1	TRANSISTOR			553-6468-000
Q2 THROUGH Q5	SAME AS Q2			
R1	NOT USED			
R2	RESISTOR, FXD, COMPOSITION 4700 OHMS, 10% TOL, 1/2 WATT	RCR20G472KS	81349	745-1380-000
R3	SAME AS R2			
R4	SAME AS R2			
R5	SAME AS R2			
R6	RESISTOR, FXD, COMPOSITION 10 KILOHMS, 10% TOL, 1/2 WATT	RCR20G103KS	81349	745-1394-000
R7	RESISTOR, FXD, COMPOSITION 220 OHMS, 10% TOL, 1/2 WATT	RCR20G221KS	81349	745-1324-000
R8	SAME AS R7			
R9	SAME AS R7			
R10	SAME AS R7			
R11	SAME AS R6			
R12	RESISTOR, FXD, COMPOSITION 39 OHMS, 10% TOL, 1 WATT	RCR32G390KS	81349	745-3293-000
R13	SAME AS R12			
R14	SAME AS R12			
R15	SAME AS R12			
R16	RESISTOR, FXD, COMPOSITION 100 OHMS, 10% TOL, 1 WATT	RCR32G100KS	81349	745-3268-000

www.SteamPoweredRadio.com

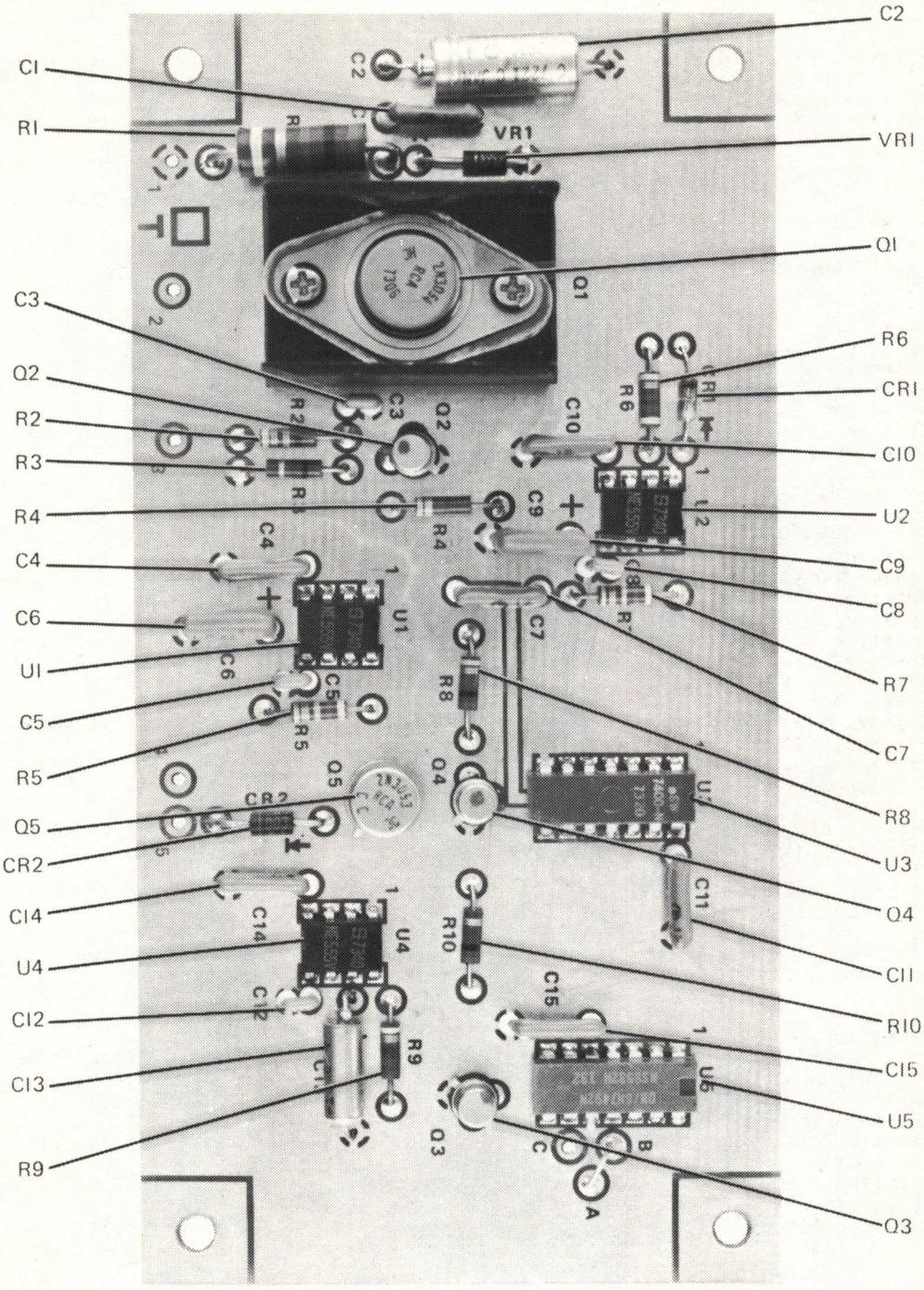

Figure 6-25. Auto Recycle Card, A24A2.

www.SteamPoweredRadio.com

SYMBOL	DESCRIPTION	MANUFACTURER'S PART NUMBER	MFR CODE	COLLINS PART NUMBER
	AUTO RECYCLE CARD, A24A2			627-6602-001
C1	CAPACITOR, FXD, CERAMIC 0.1 UF, PLUS 80% MINUS 20%, 25 VDCW	5C7A	56289	913-3806-000
C2	CAPACITOR, FXD, ELECTROLYTIC 100 UF, 20% TOL, 10 VDCW	M39003-01-2022	81349	184-9083-220
C3	CAPACITOR, FXD, CERAMIC 0.01 UF, 20% TOL, 50 VDCW	8121-050-651-103	72982	913-3279-110
C4	SAME AS C1			
C5	SAME AS C3			
C6	CAPACITOR, FXD, CERAMIC 1 UF, PLUS 80% MINUS 20%, 25 VDCW	5C13A	56289	913-3810-000
C7	SAME AS C1			
C8	SAME AS C3			
C9	SAME AS C6			
C10	SAME AS C1			
C11	SAME AS C1			
C12	SAME AS C3			
C13	CAPACITOR, FXD, ELECTROLYTIC 10 UF, 20% TOL, 20 VDCW	M39003-01-2047	81349	184-9083-470
C14	SAME AS C1			
C15	SAME AS C1			
CR1	DIODE	1N914	07688	353-2906-000
CR2	DIODE	1N4003	07688	353-6442-030
Q1	TRANSISTOR	2N3054	07688	352-0581-010
Q2	TRANSISTOR	2N2222	07688	352-0661-023
Q3	SAME AS Q2			
Q4	SAME AS Q2			
Q5	TRANSISTOR	2N3053	07688	352-0613-010
R1	RESISTOR, FXD, COMPOSITION 1CCO OHMS, 10% TOL, 1/2 WATT	RCR20G102KS	81349	745-1352-000
R2	RESISTOR, FXD, COMPOSITION 27 OHMS, 5% TOL, 2.6 WATTS	RC09GF270J	81349	745-0285-000
R3	RESISTOR, FXD, COMPOSITION 1CCO OHMS, 10% TOL, 1/4 WATT	RCR07G102KS	81349	745-0749-000
R4	RESISTOR, FXD, COMPOSITION 2200 OHMS, 10% TOL, 1/4 WATT	RCR07G222KS	81349	745-0761-000
R5	RESISTOR, FXD, COMPOSITION 470 KILOHMS, 10% TOL, 1/4 WATT	RCR07G474KS	81349	745-0845-000
R6	RESISTOR, FXD, COMPOSITION 4700 OHMS, 10% TOL, 1/4 WATT	RCR07G472KS	81349	745-0773-000
R7	SAME AS R5			
R8	SAME AS R3			
R9	RESISTOR, FXD, COMPOSITION 2200 KILOHMS, 10% TOL, 1/4 WATT	RCR07G225KS	81349	745-0869-000
R10	SAME AS R3			
U1	INTEGRATED CIRCUIT	NE555V	18324	351-1137-020
U2	SAME AS U1			
U3	INTEGRATED CIRCUIT	SN7400N	01295	351-7629-010
U4	SAME AS U1			
U5	INTEGRATED CIRCUIT	SN7492N	01295	351-7643-010

www.SteamPoweredRadio.com

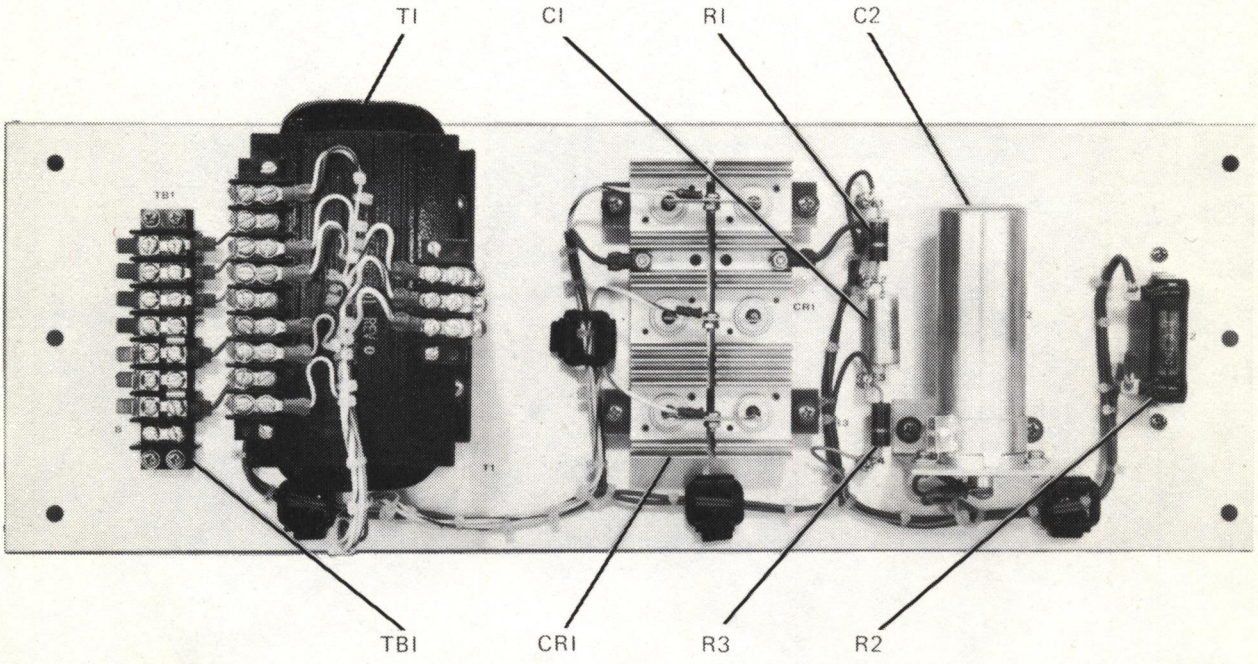

B700 397 Pb

Figure 6-26. 28-Volt Power Supply, PS1.

If You Didn't Get This From My Site,
Then It Was Stolen From....
www.SteamPoweredRadio.com

SYMBOL	DESCRIPTION	MANUFACTURER'S PART NUMBER	MFR CODE	COLLINS PART NUMBER
	28 VOLT POWER SUPPLY, PS1			786-3013-001
C1	CAPACITOR, FXD, PAPER 0.68 UF, 20% TOL, 200 VDCW	118P68402S1	56289	951-0087-000
C2	CAPACITOR, FXD, ELECTROLYTIC 1400 UF, PLUS 100% MINUS 10%, 50 VDCW	CE71C142G	81349	184-2516-000
CR1	RECTIFIER	27A611B10H2	94154	353-6327-000
R1	RESISTOR, FXD, COMPOSITION 47 OHMS, 10% TOL, 2 WATTS	RC42GF470K	81349	745-5596-000
R2	RESISTOR, FXD, WIRE-WOUND 150 OHMS, 5% TOL, 25 WATTS	0200G	44655	710-3150-100
R3	RESISTOR, FXD, COMPOSITION 10 OHMS, 10% TOL, 2 WATTS	RC42GF100K	81349	745-5568-000
T1	TRANSFORMER, PWR, STEP-DOWN	E14331	80008	664-0096-010
TB1	BOARD, TERMINAL 8 TERMINALS	601-8	75382	367-4080-000

www.SteamPoweredRadio.com

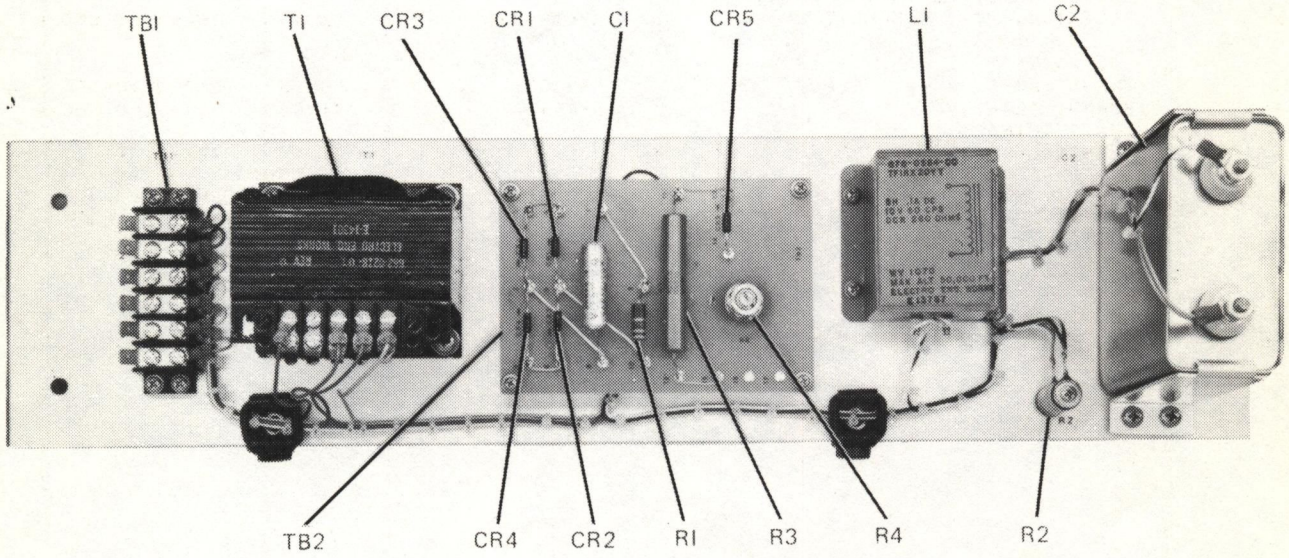

Figure 6-27. PA Bias Power Supply, PS2.

www.SteamPoweredRadio.com

SYMBOL	DESCRIPTION	MANUFACTURER'S PART NUMBER	MFR CODE	COLLINS PART NUMBER
	PA BIAS POWER SUPPLY, PS2			786-3081-001
C1	CAPACITOR, FXD, PAPER 0.047 UF, 20% TOL, 600 VDCW	186P47306S1	56289	931-8592-000
C2	CAPACITOR, FXD, PAPER 10 UF, 10% TOL, 1000 VDCW	T10100	09023	930-0038-000
CR1 CR2 THROUGH CR5	DIODE SAME AS CR1	1N4586	72699	353-6467-050
L1	REACTOR 5H INDUCTANCE	18892	80089	678-0584-000
R1	RESISTOR, FXD, COMPOSITION 330 OHMS, 10% TOL, 1 WATT	RCR32G331KS	81349	745-3331-000
R2	RESISTOR, FXD, WIRE-WOUND 10 KILOHMS, 5% TOL, 14 WATTS	RW31V103	81349	746-9131-000
R3	RESISTOR, FXD, FILM 1000 OHMS, 1% TOL, 2 WATTS	RN80B1004F	81349	705-4254-000
R4	RESISTOR, VAR, COMPOSITION 2500 OHMS, 10% TOL, 2 WATTS	RVLAYSA252A	81349	380-2768-000
T1	TRANSFORMER, PWR, STEP-UP	F14301	80008	662-0218-010
TB1	BOARD, TERMINAL 6 TERMINALS	6-141	71785	367-4060-000
TB2	TERMINAL BOARD			786-3139-001

www.SteamPoweredRadio.com

Overall schematic diagrams for the 831G-2 20-kW and 831G-2B 22.5-kW FM Transmitters are contained in the pocket attached within the back cover of this instruction book.

www.SteamPoweredRadio.com

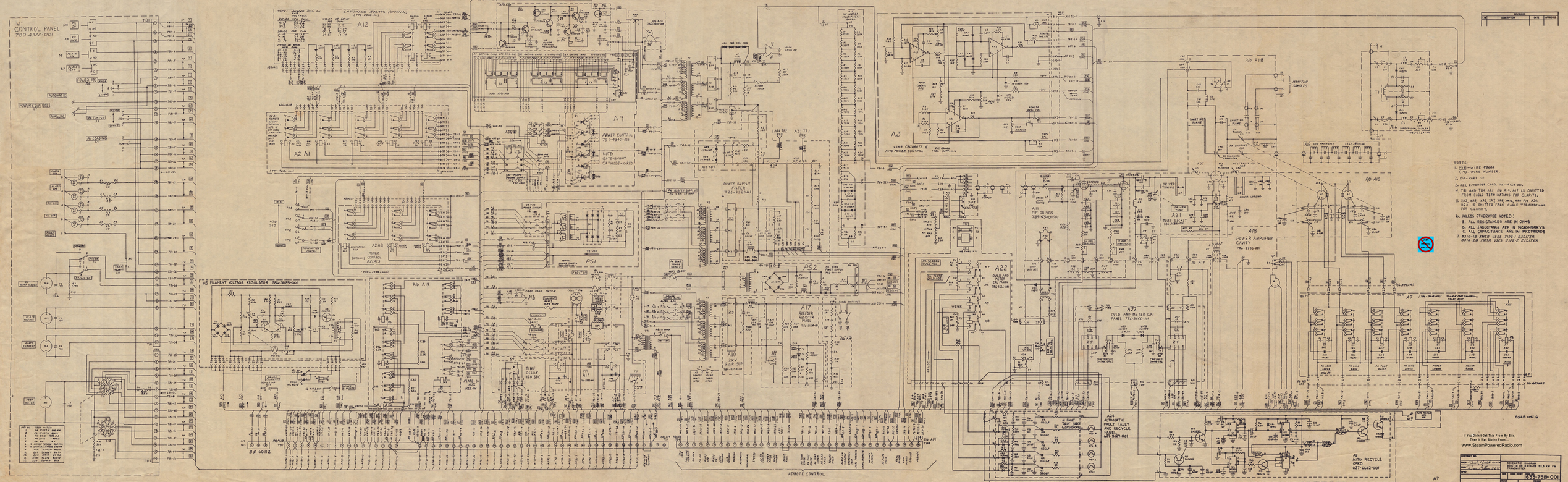
A1 CONTROL PANEL 789-4322-001
A12
A9
A2 A1
A2A3
A5 FILAMENT VOLTAGE REGULATOR 786-3085-001
A19
A8
P51
A6
A10 A14
A20
A17
PS2
A16
A15
A3
A4
A22
A21
A18
A13
A7
P/O A18
P/O A19
A17 KLEEGUN ASSEMBLY PANEL
A10 20KV PSR SUP
PS1
PS2
A24 AUTOMATIC FAULT, TALLY AND RECYCLE PANEL 627-5129-001
A2 AUTO RECYCLE CARD 627-6602-001
A11 RF DRIVER 789-4540-001
A22 CNTL AND METER CAL PANEL 786-3466-001
A21 TUBE SOCKET 786-3484-001
A15 POWER AMPLIFIER CAVITY 786-3935-001
A5 FILAMENT VOLTAGE REGULATOR
A2A1 POWER CONTROL 781-4342-001
A2A3 POWER (MECHANICAL) CONTROL RELAYS
A3 VSWR CALIBRATE & AUTO POWER CONTROL
A7 POWER SUPPLY FILTER 786-3585-001
A17 KLEEGUN ASSEMBLY PANEL
A10 20KV PSR SUP
PS1 28 VDC
PS2
A24 AUTOMATIC FAULT, TALLY AND RECYCLE PANEL 627-5129-001
A2 AUTO RECYCLE CARD 627-6602-001
A11 RF DRIVER 789-4540-001
A22 CNTL AND METER CAL PANEL 786-3466-001
A21 TUBE SOCKET 786-3484-001
A15 POWER AMPLIFIER CAVITY 786-3935-001
P/O A18
P/O A19

523-0563912-001431
1 February 1975

Rockwell International

Collins instruction book

310Z-2 FM Exciter



Broadcast Division
Collins Radio Group
Rockwell International
Dallas, Texas 75207

Printed in United States of America

If You Didn't Get This From My Site,
Then It Was Stolen From....
www.SteamPoweredRadio.com

		Page
Section 1	General Description	1-1
1.1	Introduction	1-1
1.2	Physical Description	1-1
1.3	Functional Description	1-1
1.4	Optional Equipment	1-2
1.5	Technical Characteristics	1-2
1.5.1	General	1-2
1.5.2	Monaural FM	1-3
1.5.3	Stereo FM With 786V-1	1-4
1.5.4	SCA FM With 786W-1	1-4
1.5.5	Composite Stereo STL With 785E-1	1-5
Section 2	Installation	2-1
2.1	General	2-1
2.2	Preinstallation	2-1
2.3	Wiring	2-1
2.3.1	Audio Input Connections	2-1
2.3.2	Stereo Remote Control	2-3
2.3.3	RF Output	2-3
2.3.4	Input Power	2-3
2.3.5	Power Control Override	2-3
2.4	Initial Checks	2-3
2.5	Output Frequency Change	2-3
Section 3	Operation	3-1
3.1	General	3-1
3.2	Normal Turn-On Procedure	3-1
3.3	Alternate Turn-On Procedure	3-1
3.4	Stereo/Monaural Remote Switching	3-1
Section 4	Theory of Operation	4-1
4.1	General	4-1
4.2	Block Diagram Discussion	4-1
4.3	Stereo Generator A2	4-2
4.3.1	Signals Required	4-2
4.3.2	Method of Signal Generation in 786V-1 Stereo Generator	4-2
4.3.3	Analysis of Signals Generated	4-6
4.3.4	Circuit Analysis	4-8

www.SteamPoweredRadio.com

		Page
4.4	SCA Generator A1/A2	4-9
4.4.1	General	4-9
4.4.2	Circuit Analysis	4-9
4.5	FM Modulator A4	4-10
4.6	Audio/Regulator Card A7	4-12
4.7	785E-1 STL Interface Card A3	4-12
4.8	RF Amplifier A5	4-13
4.9	Power Supplies	4-13
4.10	Meter Amplifier	4-14
Section 5	Maintenance	5-1
5.1	General	5-1
5.2	Cleaning	5-1
5.3	Lubrication	5-2
5.4	Inspection	5-2
5.5	Test Equipment Required	5-2
5.6	Alignment and Adjustment	5-3
5.6.1	Power Supply Checks and Adjustments	5-3
5.6.2	Modulator Tests	5-3
5.6.3	Audio Adjustments - Preemphasis Tracking and Linear Crosstalk	5-7
5.6.4	SCA Generator Output Level Adjustment	5-8
5.6.5	SCA Generator Frequency Adjustment	5-8
5.6.6	Stereo Generator Adjustment	5-8
5.7	Minimum Performance Standards	5-9
5.7.1	Output Frequency	5-9
5.7.2	Output Power	5-9
5.7.3	FM Noise	5-9
5.7.4	Frequency Response (Monaural)	5-10
5.7.5	Harmonic Distortion (Monaural)	5-11
5.7.6	Frequency Response (Stereo)	5-11
5.7.7	Harmonic Distortion (Stereo)	5-11
5.7.8	Subcarrier Suppression	5-12
5.7.9	Channel Separation	5-12
5.7.10	Main Channel to Subchannel Nonlinear Crosstalk	5-13
5.7.11	Subchannel to Main Channel Nonlinear Crosstalk	5-14
5.7.12	SCA Input Test	5-14
5.7.13	SCA Noise Test	5-16
5.7.14	SCA Mute Circuit Test	5-16
5.7.15	SCA Frequency Response	5-17
5.8	Frequency Change	5-17

www.SteamPoweredRadio.com

Page

Section 6 Parts List 6-1

6.1 General 6-1
6.2 Ordering Replacement Parts 6-1

Section 7 Diagrams 7-1

list of illustrations

Figure Page

1-1 310Z-2 FM Broadcast Exciter 1-0
2-1 310Z-2 FM Exciter, Outline Dimensions and Installation Details 2-2
3-1 310Z-2 FM Exciter, Front Panel Controls and Indicators 3-2
4-1 310Z-2 FM Exciter, Simplified Block Diagram 4-3
4-2 Spectrum of Signals in Stereo Baseband Audio 4-5
4-3 Elementary Time-Division Multiplex System 4-5
4-4 Balanced Modulator Output When L + R = 2; L - R = 0 4-7
4-5 Balanced Modulator Output When L + R = 1; L - R = 1 4-7
4-6 Balanced Modulator Output When L + R = 0; L - R = 2 4-8
5-1 310Z-2 FM Exciter, Maintenance Controls 5-4
5-2 Test Equipment Connections to 310Z-2 for Adjustment and Test Procedures 5-6
5-3 Stereo Test Circuit, Schematic Diagram 5-7
5-4 Test Equipment Connections to 310Z-2 for Crosstalk Test 5-14
5-5 Nonlinear Crosstalk Test Circuit, Schematic Diagram 5-15
6-1 310Z-2 FM Exciter (Sheet 1 of 3) 6-2

www.SteamPoweredRadio.com

list of illustrations (cont)

Figure		Page
6-2	310Z-2 FM Exciter (Sheet 2 of 3)	6-3
6-3	310Z-2 FM Exciter (Sheet 3 of 3)	6-4
6-4	Extender Board	6-7
6-5	SCA Generator 786W-1 A1, A2	6-9
6-6	STL Interface 785E-1 A3	6-13
6-7	Stereo Generator 786V-1 A3	6-15
6-8	Modulator/Exciter A4 (Sheet 1 of 2)	6-18
6-9	Modulator/Exciter A4 (Sheet 2 of 2)	6-19
6-10	Power Amplifier A5	6-23
6-11	Audio/Mtr Regulator A6	6-25
7-1	310Z-2 FM Exciter, Detail Block Diagram	7-3
7-2	310Z-2 FM Exciter Main Frame, Schematic Diagram	7-5
7-3	786W-1 SCA Generators A1/A2, Schematic Diagram	7-9
7-4	786V-1 Stereo Generator A3, Schematic Diagram	7-11
7-5	FM Modulator A4, Schematic Diagram	7-13
7-6	RF Amplifier A5, Schematic Diagram	7-15
7-7	785E-1 STL Interface Card A3, Schematic Diagram	7-16

list of tables

Table		Page
1-1	310Z-2 FM Exciter Special Features and Customer Options	1-3
3-1	310Z-2 FM Broadcast Exciter, Front Panel Controls and Indicators	3-3
3-2	Test Meter Indications	3-3
5-1	Required Test Equipment	5-2
5-2	Maintenance Controls	5-5
5-3	Tests	5-10
5-4	Crystal Part Number	5-18

www.SteamPoweredRadio.com

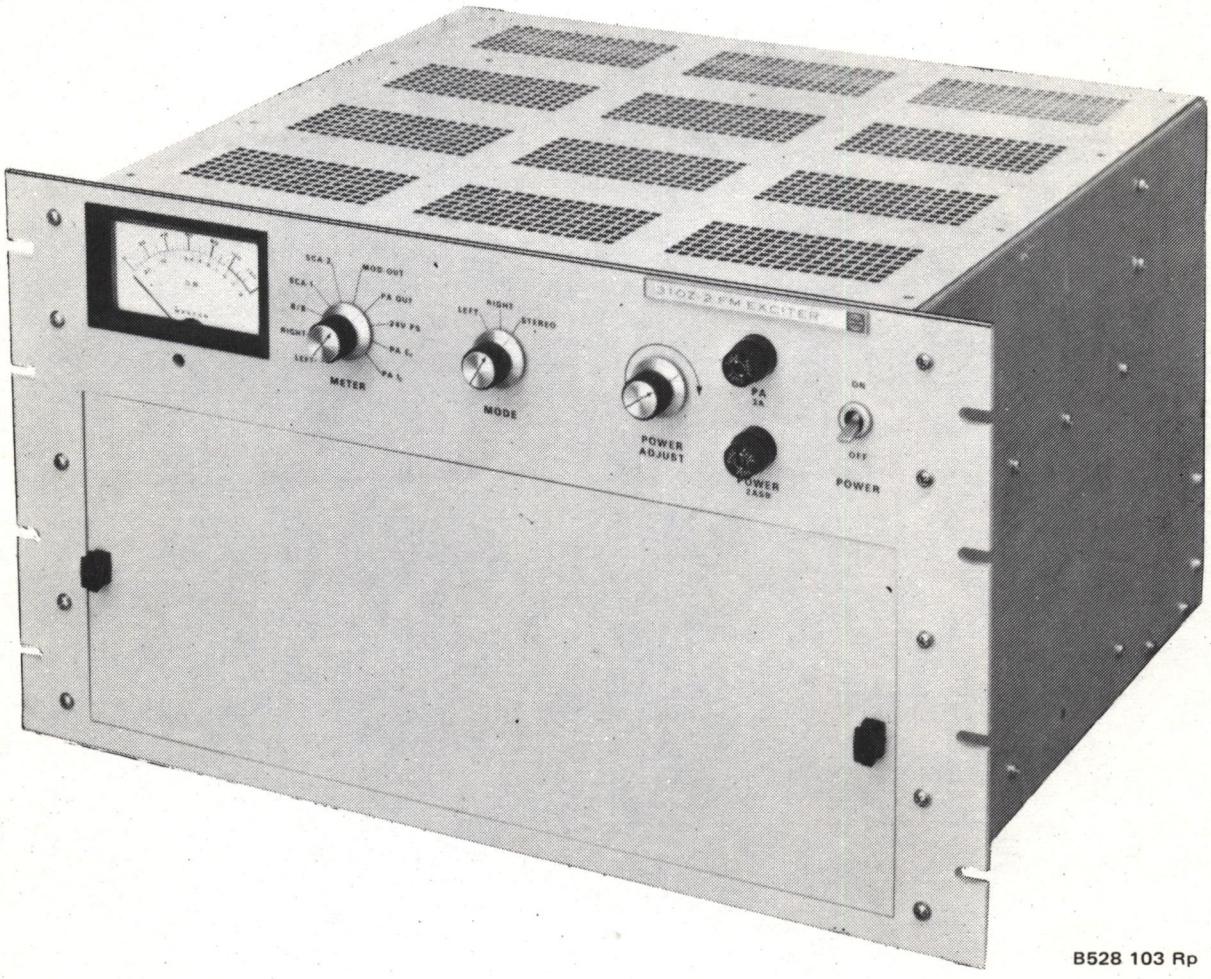

Figure 1-1. 310Z-2 FM Broadcast Exciter.

www.SteamPoweredRadio.com

1.1 INTRODUCTION

The solid-state 310Z-2 FM broadcast exciter (figure 1-1) provides a frequency-modulated signal in the 88- to 108-MHz range (exact frequency as specified by the customer) for further amplification and transmission. The exciter can be adjusted manually to provide maximum output of 20 watts and is prewired to accept three optional plug-in modules. The optional 786W-1 SCA Generators enable background music to be transmitted at either 41 kHz or 67 kHz multiplexed on an FM broadcast. The optional 786V-1 Stereo Generator allows broadcasting compatible time-division multiplex stereo. In addition, the optional 785E-1 STL (studio transmitter link) Interface Card can be substituted for the 786V-1 Stereo Generator to interface the 310Z-2 with common composite STL systems or other systems requiring an external baseband input to the modulator.

1.2 PHYSICAL DESCRIPTION

The 310Z-2 exciter is 483 mm (19 in.) wide, 267 mm (10.5 in.) high, and 381 mm (15 in.) deep, weighs approximately 18 kg (40 lb) and is designed for mounting a standard 483-mm (19-in.) equipment rack. Controls and power supply components are mounted on the chassis. A card cage secured to the chassis provides receptacles for the five plug-in circuit cards that contain most of the circuits. A removable front panel provides access to the cards. Connectors for the rf signal output and for the ac power input as well as the terminal strip for audio inputs are located on the back of the exciter. Built-in shielding prevents radiation and interference.

1.3 FUNCTIONAL DESCRIPTION

The functional units of the 310Z-2 FM Exciter are an FM modulator and an rf amplifier. In addition, a stereo generator and one or two sca (subsidiary communication authorization) generators are optional units that may be included as part of the 310Z-2. Each of these major functional units is constructed as a plug-in module, and the 310Z-2 is prewired so that the stereo generator and the sca generator plug-in modules can be added at any time.

When the 310Z-2 is used only for monaural broadcasts (without the optional sca generators or stereo generator), the audio input is applied to the baseband input of the FM modulator through the required audio processing circuits. A carrier frequency oscillator is modulated to full deviation by the input. This FM signal is also applied to the AFC system, which maintains the oscillator output frequency at carrier frequency.

When the stereo generator is used, the exciter functions the same as described above with the exception that left and right audio inputs are applied to the stereo generator through separate preemphasis networks. These audio signals are multiplexed to provide the baseband signal, which is filtered and applied to the FM modulator. When an sca generator is used, the sca audio input is amplified and used to frequency-modulate a 41- or 67-kHz subcarrier oscillator. The FM sca output is filtered and applied to the FM modulator.

www.SteamPoweredRadio.com

1.4 OPTIONAL EQUIPMENT

The 786V-1 Stereo Generator, 785E-1 STL Interface Card, and 786W-1 SCA Generators are customer options. Table 1-1 lists several 310Z-2 FM exciter features and indicates optional modules or cards required for each feature.

1.5 TECHNICAL CHARACTERISTICS

The technical characteristics for the 310Z-2 are listed below, and have been divided into five groups: (1) generator characteristics that apply to all 310Z-2 exciters, (2) those characteristics that apply to the 310Z-2 when it is used for monaural FM, (3) those characteristics that apply to the 310Z-2 when it is used for stereo FM with the 786V-1 Stereo Generator, (4) those characteristics that apply to the 310Z-2 when it is used for sca transmission with the 786W-1 SCA Generator, and (5) those characteristics that apply to the 310Z-2 when it is used for composite stereo STL transmission with the 785E-1 STL Interface Card.

1.5.1 General

Ambient Temperature Range:	0° to 55°C (32° to 131°F)
Ambient Humidity Range:	Up to 95%
Maximum Altitude:	2300 m (7500 ft)
Input Power Requirement:	117/234 volts ac, ±10%, single-phase, 50/60 Hz
RF Power Output:	0 to 20 watts
Output Impedance:	50 to 70 ohms, unbalanced
Output Frequency Range:	88 to 108 MHz, crystal-controlled (crystal installed and exciter adjusted at factory to meet customer requirement)
Carrier Frequency Stability:	Within ±500 Hz with ac line voltage of ±10% and temperature range of 0° to +55°C (32° to 131°F)
Harmonic and Spurious Radiation:	Any emission appearing on a frequency removed from the carrier by between 120 and 240 kHz is attenuated at least 30 dB below the level of the unmodulated carrier. Any emission appearing on a frequency removed from the carrier by more than 240 kHz up to and including 600 kHz is attenuated at least 35 dB below the level of the unmodulated carrier. Any emission appearing on a frequency removed from the carrier by more than 600 kHz is attenuated at least 80 dB below the level of the unmodulated carrier, with the exception of harmonics of the rf carrier.

www.SteamPoweredRadio.com

Table 1-1. 310Z-2 FM Exciter Special Features and Customer Options.

FEATURE	OPTIONAL MODULES OR CARDS REQUIRED		
	786V-1 STEREO GENERATOR	785E-1 STL INTERFACE CARD	786W-1 SCA GENERATOR(S)
Monaural broadcasting (no options required)			
Monaural broadcasting with sca			X
Stereo broadcasting	X		
Stereo broadcasting with sca	X		X
Composite STL		X	
Composite STL with sca		X	X

Type of Modulation: Direct frequency modulation

Modulating Frequencies: 20 Hz to 100 kHz

FM Noise Level: 65 dB below 100% modulation

AM Noise Level: 55 dB below carrier level

1.5.2 Monaural FM

Audio Input Impedance: 600 ohms balanced

Audio Input Levels:

Monaural +10 ±2 dB mW for 100% modulation

SCA -10 to +15 dB mW adjustable from 0% to 10% modulation

Frequency Response: Standard 75-microsecond preemphasis; others optional

Distortion: Not more than 0.25% thd (total harmonic distortion)

Not more than 0.25% imd (intermodulation distortion)

www.SteamPoweredRadio.com

1.5.3 Stereo FM With 786V-1

Audio Input Impedance:	600 ohms balanced
Audio Input Levels:	+10 ±2 dB mW for 100% modulation
Frequency Response:	Standard 75-microsecond preemphasis for both right and left channels; others optional
Distortion:	Not more than 0.5% thd for 50-Hz to 15-kHz audio modulation, Not more than 0.5% imd
Stereophonic Subcarrier and Pilot Carrier Phasing:	Phase difference between the stereophonic subcarrier and pilot carrier is within the limits required for channel separation of more than 35 dB with audio-modulating frequencies of 50 Hz to 15 kHz.
Stereo Channel Separation:	At least 35 dB, 50 Hz to 15 kHz
Crosstalk:	At least 45 dB below either single-channel level
38-kHz Stereo Subcarrier Suppression:	45 dB below 90% modulation of the main carrier
Pilot Carrier Frequency:	19 kHz ±2 Hz
Pilot Carrier Level:	Adjustable from 0% to 12% modulation of main carrier

1.5.4 SCA FM With 786W-1

Audio Input Impedance:	600 ohms, balanced
Audio Input Level:	-10 to +15 dB mW, adjustable from 0% to 10% modulation
SCA Subcarrier Center Frequency:	67 kHz or 41 kHz
SCA Frequency Modulation of Main Carrier:	Adjustable from 0% to 30%
SCA Generator Center Frequency Stability:	Within ±0.5%
Frequency Response:	Standard 75-microsecond preemphasis

www.SteamPoweredRadio.com

FM Noise Level:	Less than -55 dB
Distortion:	1.0% for 50 Hz to 5 kHz with 3.5-kHz deviation
	2.0% for 50 Hz to 5 kHz with 7.5-kHz deviation
Crosstalk:	Crosstalk from main channel and stereo sub-channel into the sca channel shall be 50 dB below 10% modulation of the main channel. Reference: 4.0-kHz sca deviation.

1.5.5 Composite Stereo STL With 785E-1

External Baseband Input:	3.5 V p-p into 4700 ohms when used with 785E-1 STL Interface Card
External Telemetry Input:	1 V rms 20 to 30 Hz, when used with 786W-1 SCA Generator

www.SteamPoweredRadio.com

2.1 GENERAL

Remove all packing material carefully. Check equipment against shipping invoices and records. Inspect the unit for damaged or missing components. Check for free movement of front panel controls. Any claims for damage should be filed promptly with the transportation agency. If such claims are to be filed, all packing material must be retained. Store the factory shipping container for future use.

2.2 PREINSTALLATION

Make sure that all plug-in filters and cards are securely plugged in. Refer to Section 6, Parts List for locations.

NOTE

If the 786V-1 Stero Generator is not to be installed, filter FL1 is not required.

2.3 WIRING

2.3.1 Audio Input Connections

Use only balanced 600-ohm audio inputs to the 310Z-2. Use only twisted, shielded parts for input cables. (See figure 2-1.)

a. Monaural Inputs - Connect the monaural audio input line to TB1-1 and TB1-3. Connect the cable shield to TB1-2. (See figure 2-1.)

b. Stereophonic Inputs - Connect the left channel audio input line to TB1-1 and TB1-3. (See figure 2-1.) Connect the cable shield to TB1-2. Connect the right channel audio input line to TB1-4 and TB1-6. Connect the cable shield to TB1-5. Be sure that the 786V-1 Stero Generator is plugged into the 310Z-2.

c. SCA Inputs - Connect the SCA-1 (41-kHz) audio input to TB1-7 and TB1-9. Connect the cable shield to TB1-8. Connect the SCA-2 (67-kHz) audio input to TB1-10 and TB1-12. Connect the cable shield to TB1-11. Be sure that the 786W-1 SCA Generator is plugged into the 310Z-2. Set the 786W-1 METER switch to 3.5 kHz or 7.5 kHz, depending on the deviation to be used. Set the 786W-1 MUTE ENABLE switch to ON.

d. Composite STL Input - Connect the output of the STL receiver to B/B IN jack J2 on the rear of the exciter. This connection should be made with RG-58A/U or RG-223 coaxial cable. Check to see that the 785E-1 STL card is installed in the A3 card position and that filter FL1 is removed from its socket.

www.SteamPoweredRadio.com

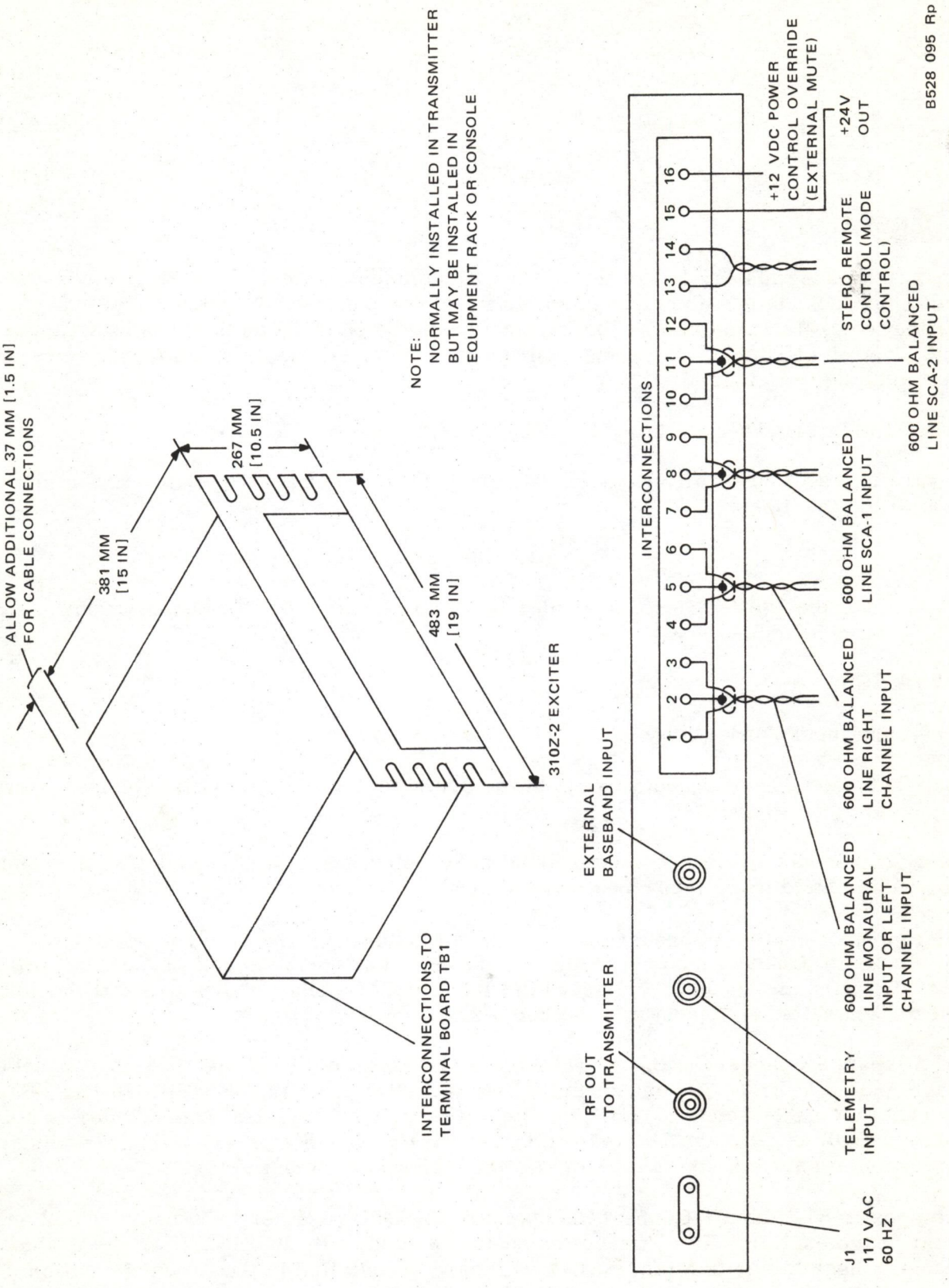

Figure 2-1. 310Z-2 FM Exciter, Outline Dimensions and Installation Details.

If You Didn't Get This From My Site,
Then It Was Stolen From....
www.SteamPoweredRadio.com

e. Radio Remote Control Telemetry Input - Connect the telemetry output of the remote control unit to TELE IN jack J3 on the rear of the exciter. This connection should be made with RG-58A/U or RG-223 coaxial cable. Check to see that a 67-kHz 786V-1 SCA Generator is installed in the A2 card position.

2.3.2 Stereo Remote Control

If stereo remote control is desired, connect the leads from the station remote control system to TB1-13 and TB1-14 (ground). A normally closed contact must be provided for stereo operation.

2.3.3 RF Output

Connect a coaxial cable from the transmitter rf input to the exciter RF OUT jack, J1.

2.3.4 Input Power

Connect the ac line cord between P1 on the exciter and 117 volts ac.

CAUTION

Do not operate the 310Z-2 exciter without a load connected to the rf output, and do not operate the exciter over any extended period of time into a vswr greater than 2:1. To guard against such operation, steps should be taken during installation, as outlined in paragraph 2.3.5.

2.3.5 Power Control Override

A dc voltage source (+12 volts) should be connected to TB1-16 to protect the exciter output transistors when no plate voltage is present in the transmitter. This dc voltage is applied to the power regulator card to reduce the exciter output power to a safe level.

If the override voltage is not available directly from the transmitter with which the exciter is being used, the voltage provided at TB1-15 of the exciter may be connected through a relay so that it is applied whenever plate voltage is removed from the power amplifier stage in the transmitter.

2.4 INITIAL CHECKS

The 310Z-2 exciter is carefully adjusted and inspected at the factory and no special tests or adjustments are required upon installation. However, once the exciter has been installed, the transmitter should be checked to ensure that it is operating properly.

2.5 OUTPUT FREQUENCY CHANGE

The output frequency of the 310Z-2 is crystal controlled and can be changed to any desired frequency between 88 and 108 MHz. To change the exciter frequency, refer to paragraph 5.8.

www.SteamPoweredRadio.com

3.1 GENERAL

Only the three front panel switches and the meter on the front panel of the exciter are used during normal operation. Refer to figure 3-1 for control and indicator locations and to table 3-1 for control and indicator descriptions. After the exciter has been placed in operation, it is necessary only to check meter indications (table 3-2) from time to time to ensure that the exciter is operating properly.

3.2 NORMAL TURN-ON PROCEDURE

a. Place POWER switch to ON.

b. Set MODE switch to LEFT, RIGHT, or STEREO, depending on the type of modulation desired.

3.3 ALTERNATE TURN-ON PROCEDURE

When the 310Z-2 is used in a Collins transmitter that has automatic-sequencing circuits, the POWER switch is normally left in the ON position and the exciter is turned on and off by the power-sequencing circuits of the transmitter.

3.4 STEREO/MONAURAL REMOTE SWITCHING

When it is desired to switch the exciter from monaural to stereo from a remote location, a stereo on/off switch is connected between pins 13 and 14 of terminal board TB1. This switch will then control relay K1 so that remote switching can be used as long as the MODE switch is in either the LEFT or RIGHT position. The STEREO position overrides the remote stereo OFF position. The selected LEFT or RIGHT line will then serve as a feed for monaural operation.

www.SteamPoweredRadio.com

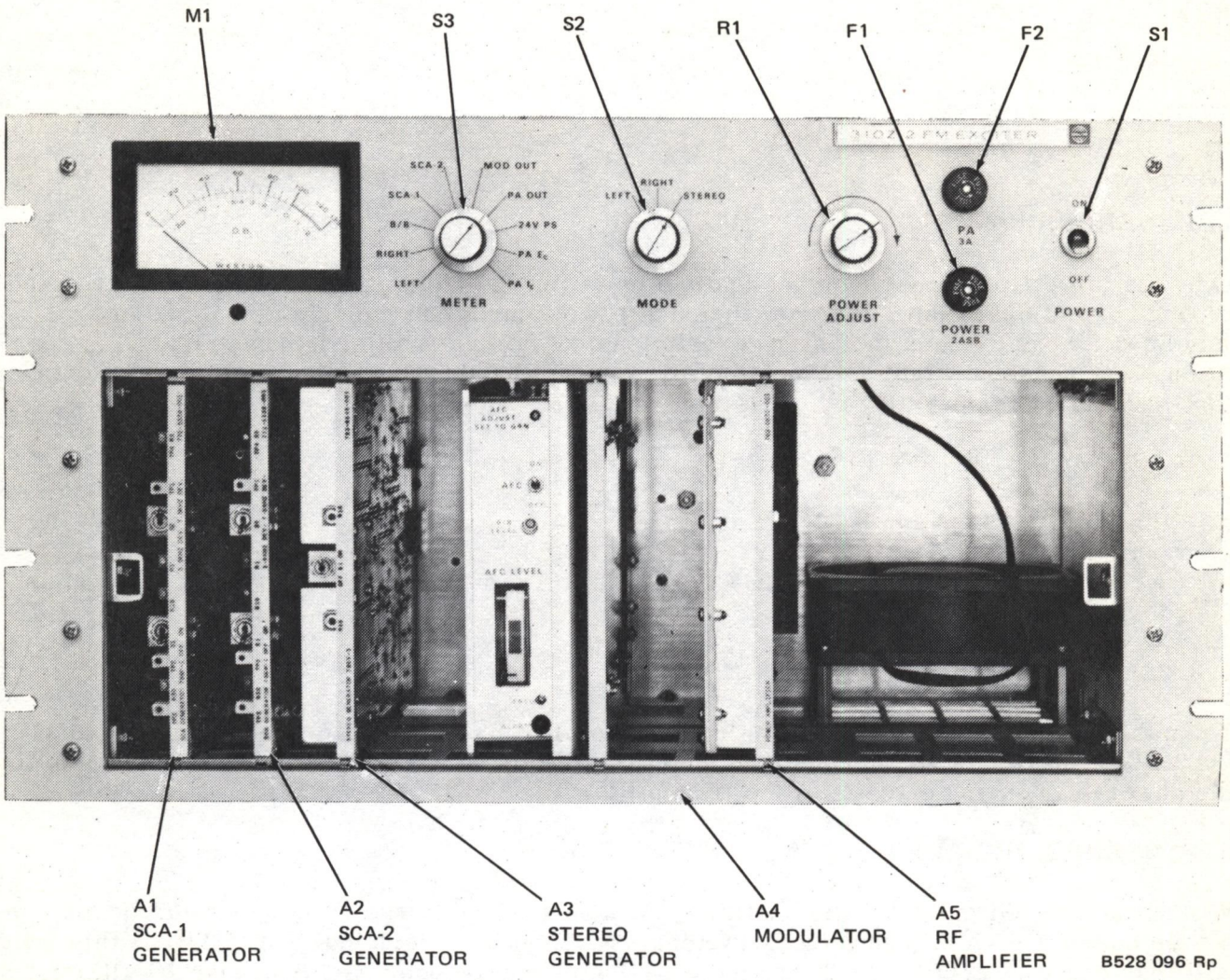

Figure 3-1. 310Z-2 FM Exciter, Front Panel Controls and Indicators.

www.SteamPoweredRadio.com

Table 3-1. 310Z-2 FM Broadcast Exciter, Front Panel Controls and Indicators.

REF DES	CONTROL OR INDICATOR	FUNCTION
S1	POWER	Controls the application of primary power to the exciter.
S2	MODE	Selects either the left audio input to be broadcast monaurally (LEFT), or the right audio input to be broadcast monaurally (RIGHT), or the left and right audio inputs to be broadcast stereophonically (STEREO).
S3, M1	METER	Meter M1, in conjunction with function switch S3, permits monitoring of the various audio inputs and dc parameters from the 310Z-2 exciter. Refer to table 3-2.
R1	POWER ADJUST	Adjusts power output of exciter.

Table 3-2. Test Meter Indications

POSITION OF METER SWITCH S3	FUNCTION	METER INDICATION
LEFT	Left channel modulation	Semi-peak reading meter responds to peak audio level in manner similar to modulation monitor.
RIGHT	Right channel modulation	Same
B/B	Baseband output of stereo generator	Same
SCA-1	41-kHz sca modulation	Calibration at 100% determined by setting of S2 on 786W-1 in A1 card position.
SCA-2	67-kHz sca modulation	Same as SCA-1 except card A2
MOD OUT	Modulator rf output	Relative rf output of modulator. Reads 50% to 100% as noted on individual data sheet.

www.SteamPoweredRadio.com

Table 3-2. Test Meter Indications (Cont).

POSITION OF METER SWITCH S3	FUNCTION	METER INDICATION
PA OUT	Power amplifier rf output	Relative rf output of power amplifier. Calibration controlled by R2 on 310Z-2 main frame. Set for 100% under normal power output and load conditions.
24V PS	Output of fixed power supplies of main frame	Reads combined output of fixed 24-volt power supplies. Normally reads 85% to 115%. Reads 40% to 60% when either supply inoperative.
PA Ec	Power amplifier collector voltage	Reads relative collector voltage to driver and power amplifier transistors. Consult data sheet for normal readings.
PA Ic	Power amplifier collector current	Reads relative collector current to driver and power amplifier transistors. Consult data sheet for normal readings.

www.SteamPoweredRadio.com

4.1 GENERAL

The 310Z-2 exciter produces a frequency-modulated output for driving a power amplifier in an FM broadcast transmitter. The 310Z-2 employs the direct method of frequency modulation. The optional 786V-1 Stereo Generator produces signals that meet all FCC requirements for stereophonic broadcasting. The optional 786W-1 SCA Generator produces an FM subcarrier for broadcasting background music under an FCC Subsidiary Communications Authorization.

4.2 BLOCK DIAGRAM DISCUSSION

Refer to figure 4-1 (simplified block diagram), figure 7-1 (detail block diagram), and figure 7-2 (main frame schematic) during the following discussion. The major circuits of the 310Z-2 are contained on plug-in modules; and as shown on figure 4-1, these modules are the major blocks of the 310Z-2 exciter. When an exciter is used for monaural broadcasting without the optional modules, the monaural input is normally applied to the audio-processing circuits and then directly to the modulator module as the baseband signal. Since the remaining circuits operate the same for either monaural or stereophonic and sca broadcasting, the block diagram discussion covers a complete exciter with the optional modules.

The left and right audio input signals are applied through the audio frequency circuits as the modulation input to the balanced modulator of the stereo generator. These signals modulate two 38-kHz subcarrier signals that are 180° out of phase. As a result, the 38-kHz carrier is canceled so that the modulator output consists of only the two modulation frequencies and the desired modulation sidebands of the carrier frequency. One component is directly proportional to the sum of the two audio signals (L + R), and the other component is a double-sideband signal (L - R). The output from the balanced modulator is combined with the 19-kHz pilot carrier. Signal generation within the stereo generator is described in paragraph 4.3.

The output from the stereo generator is passed through a 53-kHz low-pass filter and then combined with the output from the sca generator (if used) to produce the baseband signal. The 19-kHz pilot carrier is derived in the stereo generator by routing one of the 38-kHz subcarrier signals to a divide-by-2 circuit to produce the 19-kHz pilot carrier, which is phase-locked to the 38-kHz signals. The baseband signal is then applied to the modulator.

The sca audio inputs are applied to an audio transformer in the sca generators, routed through a preemphasis network, amplified, and used to frequency-modulate the carrier frequency of the subcarrier. The audio input is also monitored by a carrier mute circuit, which removes the sca output whenever the audio input drops below the selected mute level.

www.SteamPoweredRadio.com

4.3 STEREO GENERATOR A2

The 786V-1 Stereo Generator performs the conversion of stereophonic input signals to an output that conforms to the standards approved by the FCC for transmission of stereophonic signals. To provide a realistic stereo effect, the 786V-1 maintains the difference in time delay and signal amplitude from the sound source to both the right and left channel microphones through the entire stereo system. Channel separation, which is the isolation between the two channels, is held to greater than 35 dB by the 786V-1 to enhance the stereo effect to the listener. The following paragraphs discuss stereophonic signal generation and the principles of operation of the 786V-1 Stereo Generator. Refer to figure 7-4 for a schematic diagram of the 786V-1 Stereo Generator.

4.3.1 Signals Required

The FCC requires that stereophonic FM broadcast signals be compatible, which means that the signals may be detected by either a monophonic or stereophonic receiver. To satisfy this and other requirements of the FCC, the signals and frequencies generated must be as shown in figure 4-2. In monophonic receivers only, the L + R (left plus right) audio frequency component of the signal, called the main channel, is used. The L - R (left minus right) component of the baseband signal, called the subchannel, is a difference signal only and is composed of sidebands of a 38-kHz suppressed subcarrier. This difference component and the 19-kHz pilot carrier signal are reduced by the deemphasis network of the monophonic receiver.

In FM stereophonic receivers, all signals shown in figure 4-2 are detected and used. The L - R subchannel and L + R main channel signals are mixed, added, and subtracted to separate them into left and right audio signals. The 19-kHz pilot carrier signal is doubled in the receiver to regenerate the 38-kHz suppressed subcarrier, which is used to demodulate the stereo signal. By this means, proper phase relationship is maintained between main channel and subchannel frequencies and between the left and right audio channels.

After the L + R and L - R signals have been generated, any interaction or exchange of information between the main channel (L + R) and the subchannel (L - R) represents crosstalk, which deteriorates the signals and has the effect of adding noise. In stereo transmitting systems, crosstalk must be kept at least 40 dB below either signal-channel level.

To maintain 30-dB channel separation, as required by the FCC, for the condition of an input into one channel only, the main channel and stereo subchannel signals must have equal peak amplitude, within approximately 0.3 dB, and the envelope of the subchannel signal must cross the zero level simultaneously with the main channel signal, within approximately ±3°.

4.3.2 Method of Signal Generation in 786V-1 Stereo Generator

The 786V-1 generates the spectrum of signals shown in figure 4-2 by the time-division multiplex method. The basic system operating principle is shown in figure 4-3. The left and right audio channels are switched into the link (used alternately) at a 38-kHz rate. If the receiver switching rate is synchronized with the transmitter switching rate, the original left and right audio signals are detected. In the receiver the frequency of the 19-kHz pilot carrier is doubled to synchronize the receiver to the transmitter. It is important that the switching frequency in both the stereo generator and the receiver be of the same phase to retain the identity of the left and right audio signals. In the 786V-1 generator

www.SteamPoweredRadio.com

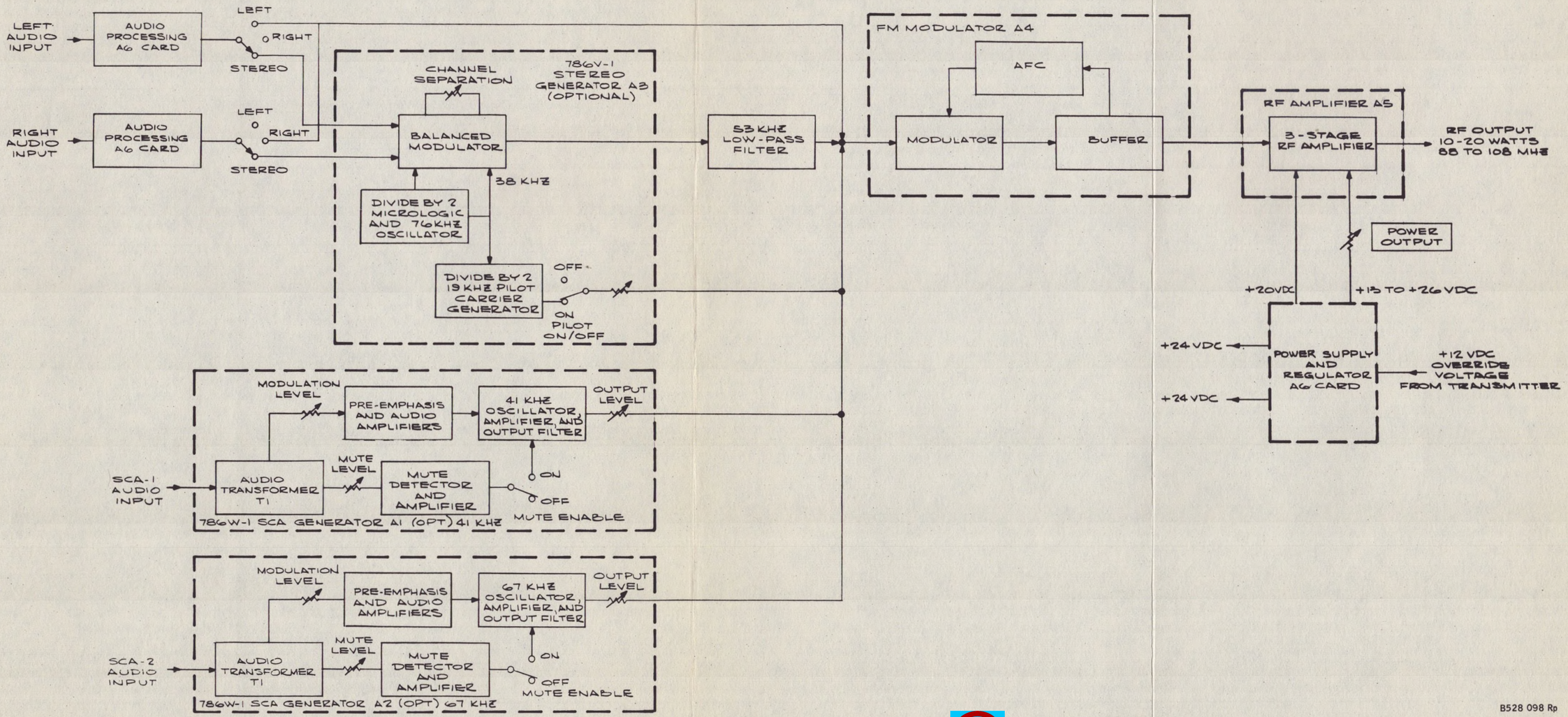

USER MANUAL WIKI.COM

If You Didn't Get This From My Site,
Then It Was Stolen From....
www.SteamPoweredRadio.com

B528 098 Rp

Figure 4-1. 310Z-2 FM Exciter, Simplified Block Diagram.

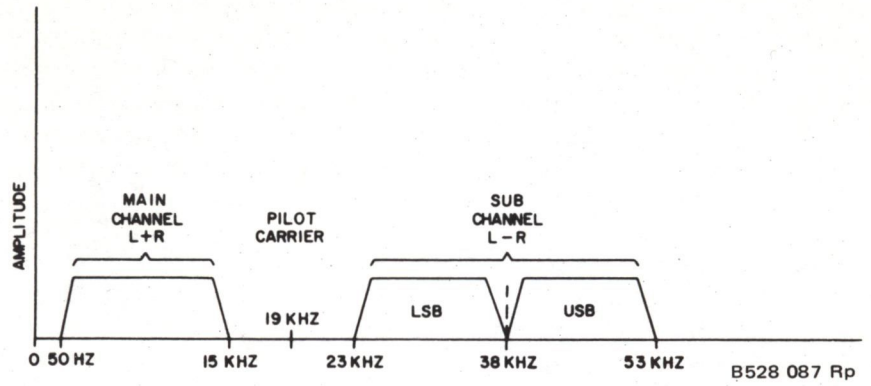

Figure 4-2. Spectrum of Signals in Stereo Baseband Audio.

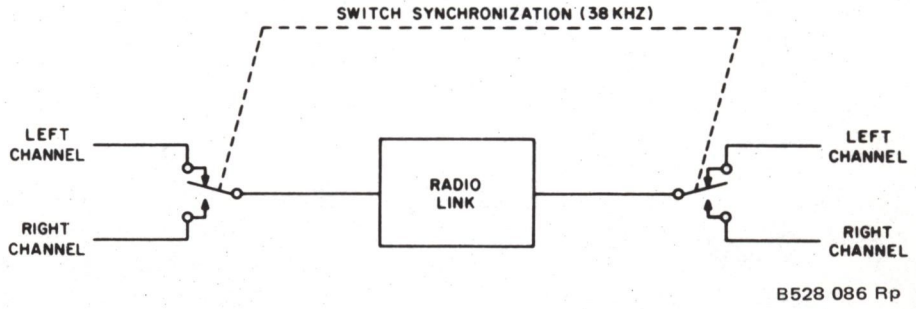

Figure 4-3. Elementary Time-Division Multiplex System.

a crystal-controlled oscillator is used to generate a 76-kHz signal. This 76-kHz signal is divided by 2 in a micrologic flip-flop circuit; and by using both the logic 1 and the logic 0 outputs of the flip-flop, two 38-kHz square waves are obtained that will be exactly 180° out of phase. One of the 38-kHz square-wave signals is used to trigger another micrologic flip-flop (A4) to obtain a phase-locked 19-kHz pilot carrier signal.

To generate the baseband stereo signals, the 786V-1 Stereo Generator utilizes the basic circuits and functions of a balanced modulator. Refer to figure 4-1, the exciter block diagram, for component relationship and signal flow; refer to figure 7-4, the stereo generator schematic, for circuit detail. Although transistors Q2 and Q5 and their associated circuits function as a balanced modulator, several additional considerations affect the overall operation of the circuits to produce the desired stereo output signal. Separate input channels couple the two different modulating audio signals, L and R (left and right), to the modulator. Emitter follower Q1 applies the right audio signal to the balanced modulator, and emitter follower Q4 couples the left audio signal to the balanced modulator. The 38-kHz subcarrier signals are applied to the balanced modulator transistor switches, Q3 and Q6. Because the two 38-kHz signals are of opposite phase, modulator transistors Q2 and Q5 are switched on and off at 38 kHz. Furthermore, when the ouputs from Q2 and Q5 are combined, the subcarrier signals cancel and the 38-kHz subcarrier does not appear in the

www.SteamPoweredRadio.com

output signal. Transistor Q2 conducts during one half-cycle of the subcarrier frequency, and during this half-cycle one excursion of the square wave is modulated by the audio signal in the right channel. During the next half-cycle of the subcarrier, Q5 conducts and the next excursion of the square wave is modulated by the audio signal in the left channel. As stated previously, the 38-kHz subcarrier signals are balanced out in the modulator, and only the two modulating audio frequencies and the desired modulation sidebands of the carrier frequency are combined in the output.

4.3.3 Analysis of Signals Generated

If can be demonstrated by mathematical analysis that if a square wave is modulated alternately by two audio signals, two significant components are in the resultant signal. One component is directly proportional to the sum of the two audio signals (L + R), and the other component is a double-sideband (DSB) signal centered on the switching frequency or subcarrier frequency (38 kHz). Mathematical analysis in detail is hardly within the scope of this manual. One other fact derived from such analysis is necessary, however, to an understanding of the 786V-1 operation. Because the peak amplitude of the fundamental sine-wave components of a square wave is $4/\pi$ times the peak amplitude of the square wave itself, the L - R component mentioned above is $4/\pi$ times the L + R component.

To make L + R = L - R, as required by the FCC, small portions of the L and R signals are added directly in the 786V-1, shunted around the balanced modulator through R9, R25, R16, and C13, and added to the modulator output.

Development of the FCC required signal in the 786V-1 may also be demonstrated by an analysis of the waveforms generated. Figure 4-4 represents the circuit operation when the inputs to each of the audio channels (L and R) are identical sine waves. On one half-cycle of the square-wave switching frequency (subcarrier frequency), Q5 conducts and the L signal is utilized (or sampled). On the next half-cycle, Q2 conducts and the R signal is utilized. Expressing the same action in a different way, on one half-cycle of the switching frequency an excursion of the subcarrier square wave is modulated by the left channel audio signal; and on the next half-cycle the next excursion of the subcarrier square wave is modulated by the right channel audio signal. As may be seen in figure 4-4, the 38-kHz subcarrier switching frequency is balanced out, and with equal sinewave input to both audio channels (L - R = sine wave) no sidebands are generated. The spikes shown on the composite sine wave in the third illustration of figure 4-4 are caused by imperfect switching and must be filtered out. The output of the modulator is then a sine wave identical to the original sine-wave input in either channel (L - R or [L + R]/2). Equal sine-wave input seldom occurs in an actual broadcast but is shown here for analysis.

Figure 4-5 shows the balanced modulator output when L = 1 and R = 0. The output of the balanced modulator is an audio component plus DSB components centered on the switching frequency, and odd harmonics. When the odd harmonics are filtered out by a phase-linear low-pass filter, the third waveform results. The audio component is then increased by $4/\pi$ and the fourth illustration results.

Figure 4-6 shows the time-division multiplex signal when L = -R, or L + R = 0, and L - R = 2L (or 2R). The composite waveform from the balanced modulator is shown in the third illustration. This waveform is composed of equal but opposite audio components, DSB components centered on the switching frequency, and odd harmonics. The audio components balance out; and when the odd harmonics are removed by filtering, the waveform in the fourth illustration results. This waveform is a DSB signal, which equals L - R as required.

www.SteamPoweredRadio.com

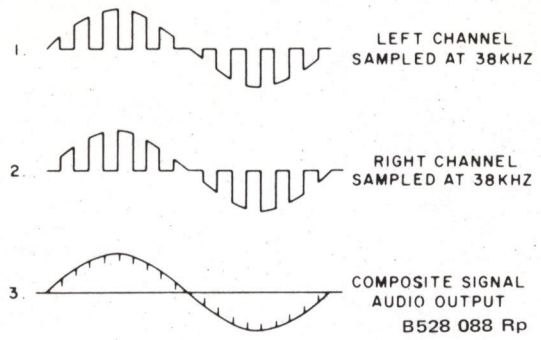

Figure 4-4. Balanced Modulator Output When L + R = 2; L - R = 0.

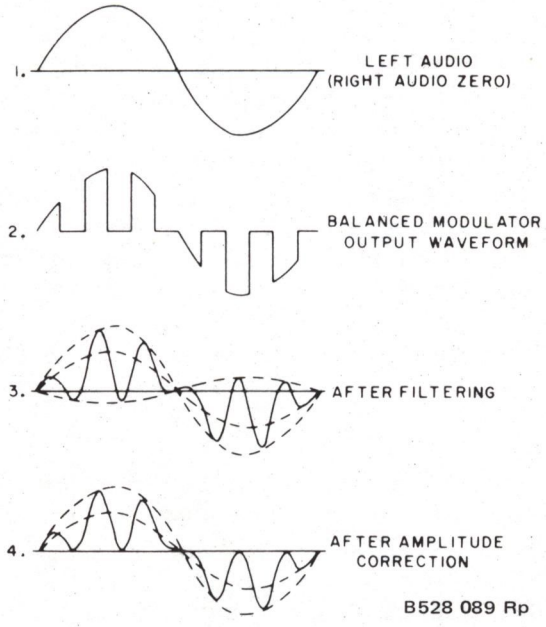

Figure 4-5. Balanced Modulator Output When L + R = 1; L - R = 1.

www.SteamPoweredRadio.com

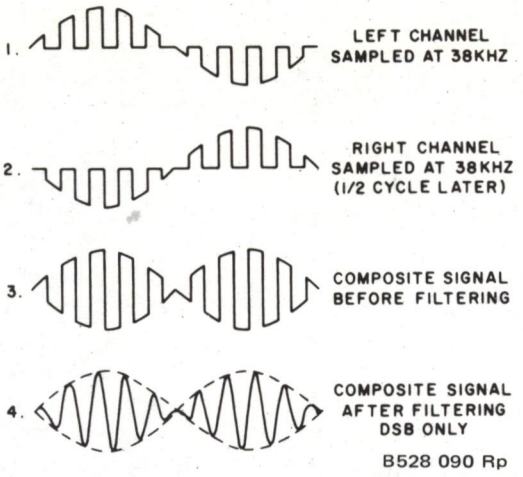

Figure 4-6. Balanced Modulator Output When L + R = 0; L - R = 2.

Perhaps the relationship of the L + R and L - R signals should be noted again here in connection with the above analysis. The L + R main channel component of the composite signal represents the sound that would be heard if only one microphone is used for input, and it is also the sound that would be heard from a microphonic receiver tuned to a stereo broadcast. The L - R component is a difference signal only. It may be a positive value, may be equal to zero, or may be a negative value (in the case where R is greater than L). When the composite signal is detected in a stereo receiver that is exactly synchronized with the transmitter, the L + R component is split and routed to both left and right audio channels in the receiver. The L - R difference signal is split also, and in effect is added to the left channel audio component and subtracted from the right. The result is (L + R)/2 + (L - R)/2 = L in the left channel, and (L + R)/2 - (L - R)/2 = R, in the right channel. In this way the receiver gives a perfect reproduction of the stereo input to the transmitter.

4.3.4 Circuit Analysis

Both left and right audio signals are fed through preemphasis networks in the exciter before application to the right and left audio inputs of the stereo generator, connector pins 13 and 29, (figure 7-4). Within the generator the left and right audio channels are identical. The audio signals are fed through 15-kHz low-pass filters (FL1 and FL2), which sharply attenuate frequencies above 15 kHz. From FL1, capacitor C1 couples the right audio signal to the base of emitter follower Q1 and then to the modulator at the junction of resistors R9 and R10. The right channel audio signal is divided so that the signal through R9 adds to the left channel signal and the signal through R10 modulates the 38-kHz subcarrier. A similar circuit couples the left audio signal to emitter follower Q6 and to the other side of the balanced modulator at the junction of resistors R25 and R26. The signal through R25 adds to the right channel signal (through R9) and is routed around the modulator to increase the L + R component of the modulator output. Variable resistor R16 provides a control for the amplitude of the L + R component to control channel separation.

www.SteamPoweredRadio.com

The 38-kHz subcarrier signals for the balanced modulator are produced from the output of the 76-kHz oscillator, transistor Q7 and its associated circuits. The oscillator frequency is controlled by crystal Y1, and after amplification by amplifier Q8 the 76-kHz signal triggers a flip-flop (micrologic A1). By using both the logic 1 and the logic 0 from this flip-flop, two 38-kHz signals are obtained that are 180° apart in phase. The output signals from flip-flop A1 are first amplified by the inverters (micrologics A2 and A3) and then applied to the modulator through transistor switches Q3 and Q6. Capacitor C26 helps maintain balance between Q3 and Q6 and improves the switching operation. The 38-kHz signals combine with the right and left channel audio signals at the base of Q2 and Q5 respectively. As a result, Q2 and Q5 alternately conduct at a 38-kHz rate and produce the stereo signals, which are coupled through C12. The 38-kHz output from micrologic inverter A3 triggers micrologic flip-flop A4. With both the set side (pin 1) and the reset side (pin 3) of the flip-flop grounded, the flip-flop functions as a complementary flip-flop. Thus, the output from the logic 1 side (pin 7) is a 19-kHz signal that is phase-locked to the 38-kHz subcarrier signals. The 19-kHz pilot carrier signal is routed through the PILOT CARRIER switch (S1) to a filter network (C29, C23, L2, and C24), which removes the undesired third harmonic of 19 kHz. From the filter the signal is fed through potentiometer R49, which provides control of the pilot carrier amplitude, through capacitor C14 and a resistor network to the output of the balanced modulator.

Bypass capacitors C25 and C4 provide an ac ground for any signal through Q3 when the transistor conducts. Similar capacitors (C27 and C11) perform the same function in relation to Q6. Potentiometers R12 and R28 provide a means for adjusting the sideband suppression. Of special importance in this circuit is suppression of the 76-kHz harmonics of the 38-kHz subcarrier. The L - R double-sideband signal from the balanced modulator and the 19-kHz pilot carrier signal are combined, and capacitor C12 couples the combined signal to the multiplex output, connector pin 16. The L + R amplitude correction (from R16 through C13) adds to the signal coupled through C12, to form the composite stereo baseband signal at the multiplex output.

4.4 SCA GENERATOR A1/A2

4.4.1 General

Signals from the 786W-1 SCA Generator become part of the audio baseband signal that is used to modulate the carrier. The subcarrier oscillator is a free-running multivibrator, which generates a 67-kHz center frequency that is frequency modulated by the sca audio input signal. During normal stereo broadcast operation, modulation is limited to ±3.5-kHz deviation to avoid interference with the stereo frequencies in the baseband signal. During monophonic broadcasts, ±7.5-kHz deviation is used. The modulation output from the oscillator is filtered to remove unwanted harmonics. Refer to figure 4-1, the exciter simplified block diagram, for component relationship and signal flow; refer to figure 7-3, sca generator schematic for circuit detail.

4.4.2 Circuit Analysis

The sca audio input is applied to the sca generator through connector pins 17 and 19 (figure 7-3). The main signal path is through T1 to audio amplifier Q2, but a portion of the input signal is also applied through S2 to the sca audio input of the vu meter, and through the mute level control (potentiometer R1) to the carrier mute circuits.

www.SteamPoweredRadio.com

Modulation level control R3 selects the sca audio input level, which is coupled through C1 to impedance-matching emitter follower Q1. A standard 75-microsecond preemphasis network (consisting of R7, R8, and C3) and capacitor C4 couple the input signal to audio amplifier Q2. Capacitor C30 and switch S2 couple the amplified audio signal to the modulation input of the vu meter. Switch S2 selects the correct attenuation (R46 or R47) of the modulation input signal to provide a 0-vu indication for either 3.5-kHz or 7.5-kHz frequency deviation. The audio signal used to modulate the subcarrier frequency is applied through CR1 to the subcarrier oscillator circuit. Transistors Q4 through Q7 and their associated circuits comprise the astable multivibrator circuit that generates the 67-kHz center frequency subcarrier. Deviation of the subcarrier frequency, as adjusted by modulation level R3, is within the range selected (±3.5 kHz or ±7.5 kHz). The modulated rf output from the oscillator is coupled through C10 and R3 to the base of amplifier Q8.

The carrier mute circuit is connected to the collector circuit of amplifier Q8 through MUTE ENABLE switch S1. Whenever the carrier mute circuit is being used (normally) and the audio input level drops below the level selected by MUTE LEVEL control R1, the output from the sca generator is grounded at the collector of Q8. Positive pulses that are normally applied to the base of Q12 are removed, and Q12 is turned off. As a result, C27 charges through R43 toward +20 volts; and when a potential of +10 volts is reached (in 3 seconds), diode CR9 breaks down and a positive voltage is applied to the base of Q13. Consequently, the collector of Q13 is at ground potential and this ground is applied through S1 to the collector of Q8.

Assuming that the input level is greater than the threshold level selected by MUTE LEVEL control R1, the modulated signal from the subcarrier oscillator is amplified by the direct-coupled amplifier (Q8 and Q9) and applied through CR7, R32, and R51 to the filter network. Capacitors C12 through C21 and inductors L1 through L3 comprise a 2-section band-shaping filter that removes the unwanted harmonics of the 67-kHz subcarrier. Capacitor C22 couples the filtered signal to emitter follower Q10, which provides a low output impedance to feed the SCA subcarrier signal through capacitor C23 and connector pin 43 to the input of the FM modulator card of the exciter.

4.5 FM MODULATOR A4

The FM modulator is a direct FM modulator operating at carrier frequency. A phase-lock automatic frequency control system controls the output frequency within very tight tolerances. Refer to figure 7-5, modulator schematic, for circuit details.

Transistor Q1 is operated class A as a Clapp oscillator with inductor L5 as the oscillator tank coil. The frequency of oscillation is determined by L5 and the net capacitive reactance formed by CR3, CR4, CR5, CR6, C4, C15, C7, C8 and C9. Elements CR3, CR4, CR5 and CR6 are voltage-variable capacitors, or varicaps, whose terminal capacitance is an inverse function of applied voltage. Varicaps CR3 and CR4 are operated with a fixed dc bias as modulators. The bias is adjustable by R5 and is set for best linearity in final test. Varicaps CR5 and CR6 are operated with two independent bias voltages chosen in a manner such that the devices cannot be forward biased. The more positive of the two voltages is controlled by AFC ADJUST control R7 and is used as a fine frequency or phase adjustment for the modulator. The lower of the two voltages is derived from the phase detector loop filter or from a fixed dc voltage for test purposes.

www.SteamPoweredRadio.com

The modulator circuits are temperature compensated by capacitors C7, C8 and C9 to reduce drift. Isolation from the load is enhanced by a T-pad consisting of resistors R18, R19, and R20. Buffer stage Q2 is operated at approximately 500 milliwatts. The collector circuit is coupled to the load through a Pi network consisting of L8, C24, and C25. A resistive pad consisting of R26, R27, and R28 further isolates load variations from the modulator circuits. An rf sample is derived from the buffer through C22, clipped by diodes CR10 and CR11, and then coupled to U1, a high-speed ECL (emitter-coupled logic) binary divider. The output of the divider is amplified and shaped in an amplifier composed of Q3, Q4 and associated circuits and applied to complementary-MOS divider U2. Divider U1 divides the carrier frequency input by a factor of 16 while divider U2 divides its input by 1024 for a total division of 16,384.

The reference crystal is enclosed in an oven at 75° centigrade and operates at 1/64 of carrier frequency. The reference oscillator is an untuned device consisting of integrated circuit U5 and associated components. A vernier frequency adjustment is included in the form of a screwdriver adjustment, C38, accessible from the front panel. The capacitor provides sufficient adjustment range to compensate for aging of the crystal.

The output of the oscillator is divided by a factor of 128 in divider U4 and further divided by a factor of 2 in one-half of divider U3. The other half of U3 is a simple flip-flop that acts as a phase detector. The device is clocked by the divided reference frequency signal at a rate 1/256th of the crystal frequency. The flip-flop is then reset by a narrow pulse derived from the divided modulator output signal. The large division ratio of the modulator divider effectively removes the phase shift associated with the frequency modulation process. The resultant phase deviation at the output of the divider is a very small fraction of the available phase detector range at the lowest modulating frequency of interest.

The output of phase detector U3B is a rectangular phase with a duty cycle that is a function of the time difference of the input clock and reset pulses; hence, a function of the phase angle between the modulator and reference oscillator zero crossings. This pulse is amplified by transistor Q7 and filtered by a network consisting of R53, R54, C33, and C34 to reject the comparison frequency and retain the dc component of the pulse. This dc voltage is displayed on meter M1 as an aid in initial setup and maintenance. A green band is shown on the meter as a recommended operating range, and the meter is set by the AFC ADJUST control R7, a front panel adjustment.

The dynamic characteristics of the loop are established by a loop filter consisting of R15, R16, C10, and C11. The time constants are chosen for best compromise between minimum lock acquisition time and minimum disturbance of low-frequency phase response of the modulator system.

If phase-lock is lost, the input frequencies to the phase detector will be unequal and a beat note will appear at the output of the detector. This beat note is ac coupled from amplifier Q8 to a 3.5-kHz low-pass filter and further amplified by amplifier Q9. A series of constant-amplitude pulses with a repetition rate proportional to the difference frequency appear at Q9 collector. These pulses are rectified and used to turn on transistor Q5, which activates ALARM lamp CR16 and turns off transistor switch Q6. Switch Q6 applies a dc bias to the power amplifier regulator, which squelches the exciter rf output, thus preventing off-frequency operation. A charging current is applied to the AFC loop filter causing capacitor C10 to charge to a value much greater than its normal value. Four-layer diode CR18 conducts when this charge reaches a certain value and discharges C10 to a value much lower

www.SteamPoweredRadio.com

than its normal value. The charging current then slowly recharges C10 and sweeps the oscillator frequency through its normal operating frequency. When the correct frequency is reached, the loop is locked and the charging current is removed. At this time ALARM lamp CR16 is extinguished and the dc bias is removed from the pa power supply allowing normal operation to resume. This circuit allows much faster lock acquisition and more optimum loop time constants for the application to be employed.

Transistors Q10, Q11 and associated components are used to provide a "soft" turn-on and turnoff for the crystal oven heater to minimize transients in the modulator. The circuit is straight forward with Q10 operating as a current amplifier and Q11 operating as a saturated switch.

4.6 AUDIO/REGULATOR CARD A7

Audio preemphasis for both monaural and stereo operating modes is obtained from feedback shaping in a pair of high-gain, integrated circuit, operational amplifiers. Both channels are fed from balanced 600-ohm lines through H pads and transfomers to eliminate effects of uneven source impedances. The left channel response is determined by components R57, R58, R59, R60, C20, C21, and C22. All are fixed low tolerance components. Right channel response is determined by similar components with the addition of three vernier elements R41, R45, and R42, which allow trimming overall gain, mid-frequency and high-frequency gain, respectively to permit matching of response of both channels to a very high degree. This is done to minimize linear crosstalk in the stereo mode, which results from uneven gain and phase tracking of the left and right channels.

Variable resistor R30 provides a vernier setting of monaural gain to permit matching that mode to stereo operation.

Relay K1 is included to permit selection of stereo or monaural operation either locally or by remote control.

4.7 785E-1 STL INTERFACE CARD A3

The 785E-1 STL Interface Card provides an interface between commonly used composite STL systems or other operating modes such as quadraphonic operation requiring an external baseband input to the modulator. The 785E-1 provides input processing and the necessary gain and phase linearity to accommodate these systems. Refer to figure 7-7. A bridging input of approximately 4700 ohms is provided in a differential input configuration to avoid any degradation of signal-to-noise ratio through ground loops. An adjustable common mode rejection control, R4, is provided to minimize hum. A high frequency phase adjustment, C7, is provided to compensate for minor phase degradation at high frequencies due to receiver and transmitter bandwidth limitation.

Integrated circuit U1 is a low-noise wideband operational amplifier connected as a balanced differential input amplifier. A complementary symmetry power booster stage composed of transistors Q1 and Q2 raises the load impedance to a value suitable for U1. An output pad consisting of R16 and R17 reduces the output level of the amplifier to approximately 200 mV required by the modulator. Capacitor C7 provides a minor phase adjustment at the high end of the spectrum to compensate for phase errors in the system.

www.SteamPoweredRadio.com

4.8 RF AMPLIFIER A5

The rf amplifier card of the 310Z-2 contains a broadband, solid-state, 3-stage rf amplifier. The FM signal from the rf mixer is amplified to provide an rf output power level of 10 to 20 watts. Refer to figure 7-6 for circuit details.

The first amplifier stage (Q1, figure 7-6) receives the FM input signal (through jack J1) and operates as a class A amplifier, using 20-volt dc power supplied through filter FL1. The second and third stages (Q2 and Q3) operate as class C amplifiers so that greater efficiency is obtained. All three amplifier stages are set for gain saturation, which is permissible with an FM input signal and provides higher efficiency. Both Q2 and Q3 use a variable 10- to 26-volt dc power input through FL2. The rf output power level of the amplifier (adjustable from 10 to 20 watts) is controlled by the level of this variable dc power, which is adjustable by the POWER ADJUST control mounted on the front panel. The rf amplifier output is coupled through J2 to J1 on the exciter main chassis.

4.9 POWER SUPPLIES

Three power supplies are used in the 310Z-2 exciter. Two are fixed, regulated supplies capable of supplying 24 volts at approximately 700 mA each. One is a variable supply for the rf amplifier. The variable supply supplies up to 26 volts at approximately 2 amperes. All three power supplies are derived from a common, power transformer, rectifier, and filter system. Separate regulators are utilized for each function.

Regulators U1 and U2 are each fixed 24-volt 3-terminal regulators, which supply the basic exciter requirements. Regulator U1 supplies power to the audio and meter amplifier circuits, A1 card, and A4 card. Regulator U2 supplies power to the A2 card, A3 card, and the fixed voltage requirements of the A5 card.

Power for the driver and rf amplifier stages is supplied by an adjustable regulated power supply. This supply consists of an integrated circuit regulator (U2 on the A6 card) and associated components. The regulator supplies base bias voltage for current amplifier transistor Q1, which in turn supplies series pass transistor Q2. The power supply incorporates foldback current limiting to prevent damage to components in the event of short circuits. Overvoltage protection is provided by scr Q7 on the A6 card. Zener diode VR1 ~~28V~~ 30V sets the point at which the scr fires. This circuit prevents possible damage to the power amplifier transistors in the event of failure of the regulator circuit. When the threshold is exceeded, the scr fires placing a short circuit across the pa power supply. If there is a failure of regulator transistor Q2, then fuse F2 will blow. If the trouble is of a transient nature only, the scr will fire and cause the power supply to go into the current-limiting mode. In this case, simply turning the power supply off and then on will restore proper operation.

Two external control inputs are provided for remote power control and muting purposes. Transistor Q10 on the A6 card serves as an inverter amplifier. The alarm circuit of the modulator supplies a fixed output voltage under alarm conditions, which is coupled to the base of transistor Q10 causing it to saturate and remove the base driver to the power transistors, thus muting the rf output of the exciter.

External mute input, TB1-16, is provided for external power control or muting purposes. It is coupled to the inverting input of regulator U2 on the A6 card. Full or partial muting of the power output is possible by adjustment of the applied voltage.

www.SteamPoweredRadio.com

4.10 METER AMPLIFIER

The peak voltmeter circuit is contained on audio/regulator card A7 and is used to monitor the following audio levels in the 310Z-2:

Left audio level

Right audio level

Stereo generator baseband output

SCA-1 modulation

SCA-2 modulation

The peak voltmeter circuit is an automatic slideback peak voltmeter type that determines the peak voltage of the complex waveforms monitored by the meter. A basic slideback voltmeter operates by reverse-biasing a diode to a point where the incoming signal can no longer switch on the diode. The reverse dc bias voltage is then equal to the incoming peak voltage (disregarding the intrinsic standoff voltage of the diode). The automatic slideback voltmeter operates in a similar manner by taking the signal voltage that is conducted through the reverse-biased diode, amplifying the signal, rectifying it, and applying the resultant dc as a reverse bias to the diode. The diode will conduct until the dc reverse bias from the amplifiers cuts off diode conduction.

Grounded emitter amplifier Q1 amplifies the wideband complex waveform and feeds it to emitter follower amplifier Q2. The resultant signal is applied to peak detector Q2. At the instant that the first half-cycle of the input complex waveform appears on the base of Q2, the transistor conducts, causing the base signal to appear across load resistor R14. Capacitor C7 couples the signal to peak amplifier Q4. The signal output from Q4 is fed to rectifier Q5, which rectifies the signal and charges capacitor C10 in the negative direction. Capacitor C10 averages the negative output from Q5 into a negative dc potential that appears at the base of feedback bias amplifier Q6. With this negative bias present at the base of PNP transistor Q6 the transistor conducts, increasing the voltage drop across resistor R21. This drives the emitter of Q2 in the negative direction, biasing the transistor to the point where only a small signal peak is conducted by Q2. This reduces the signal voltage across load resistor R14 when the succeeding half-cycles of the wideband input waveform arrive at the base of the peak detector transistor. Due to the gain of transistor stages Q2 and Q4, any conduction of transistor Q2 causes the voltage at the base of Q6 to be sustained at a level that permits Q2 to conduct only during a small portion of the signal peaks. The voltage at the collector of Q2 is then proportional to the peak voltage of the complex wideband waveform. In positions 1 through 5, meter switch S3 connects this voltage through dropping resistor R23 to the front panel meter.

www.SteamPoweredRadio.com

5.1 GENERAL

The 310Z-2 FM Broadcast Exciter, which contains all solid-state circuits, has been carefully inspected and adjusted at the factory by skilled technicians using special test equipment. Therefore, the 310Z-2 should not be readjusted as part of routine maintenance procedures, but instead should be readjusted only after trouble has definitely been traced to misadjustment. When the 310Z-2 is readjusted, adjustments should be performed in accordance with the procedures outlined in paragraph 5.6 using the recommended test equipment listed in table 5-1.

To ensure peak performance and maximum service life, a regular schedule of routine maintenance should be carried out. For the 310Z-2 this routine maintenance should consist only of cleaning and inspecting, and should occasionally include a check of the minimum performance standards for the 310Z-2 in accordance with paragraph 5.7.

CAUTION

The 310Z-2 exciter should not be operated without a load connected to the rf output, and should not be operated over any extended period of time into vswr greater than 2:1.

5.2 CLEANING

Clean the 310Z-2 whenever a perceptible quantity of dust accumulates at any point inside the equipment. A solvent consisting of the following mixture may be used as a cleaning material.

Methylene chloride, 25 percent

Perchlorethylene, 5 percent

Drycleaning solvent, 70 percent by volume

Use the following procedure:

a. Remove dust from chassis, panels, and components with a soft-bristled brush.

b. Clean flat surfaces and accessible areas with a lintless cloth moistened with solvent, removing any foreign matter adhering to the equipment. Dry with a clean, dry, lintless cloth.

c. Wash switch contacts and the less accessible areas with solvent lightly applied with a small soft-bristled brush.

If You Didn't Get This From My Site,
Then It Was Stolen From....
www.SteamPoweredRadio.com

Table 5-1. Required Test Equipment.

ITEM	MANUFACTURERS DESIGNATION
Wideband FM modulation monitor	Collins 900C-3, part no. 758-5812-001
Distortion and noise meter	Hewlett-Packard 334A
Audio vtvm	Hewlett-Packard 400L
Vtvm	Hewlett-Packard 410B
Wattmeter	Sierra 164B with 181A/250 plug-in element
Stereo test circuit	Fabricated per figure 5-3
Low-distortion af signal generator	Hewlett-Packard 306A
Oscilloscope	Tektronix 581A
Vertical amplifier	Tektronix type 81
Crosstalk test circuit	Fabricated per figure 5-6
FM frequency monitor	Collins 54N-1
SCA monitor	Collins 900F-1

d. Use a burnishing tool on relay contacts if contacts are corroded or pitted. Apply solvent lightly to relay contacts with a small soft-bristled brush. Dry with a clean, dry, soft-bristled brush.

e. Use a dry, oil-free jet of air to remove any dust accumulated on the modules, circuit cards, in the card cage, or on components located in the area above the cage.

5.3 LUBRICATION

No lubrication is required.

5.4 INSPECTION

Perform periodic visual inspection of the 310Z-2 at least once each month. Inspect all metal parts for rust, corrosion, and general deterioration. Check circuit cards, wiring, and components for signs of overheating. Check the blower and cabinet fan for normal operation. Check all operating controls for smoothness of operation. Check all connections.

5.5 TEST EQUIPMENT REQUIRED

The test equipment listed in table 5-1, or its equivalent, is required to perform the adjustment and test procedures given in this section.

www.SteamPoweredRadio.com

5.6 ALIGNMENT AND ADJUSTMENT

The maintenance controls for the 310Z-2 that are referenced in the following procedures are shown on figure 5-1 and their function is described in table 5-2.

CAUTION

Do not attempt to make any adjustment to the 310Z-2 unless trouble has been definitely traced to misadjustment and the recommended test equipment is available.

5.6.1 Power Supply Checks and Adjustments

a. Remove exciter from transmitter or equipment rack, remove rear cover, and connect equipment as shown in figures 5-2 and 5-3.

b. Measure voltage across C3. It should be between 22.5 and 25.5 V dc.

c. Measure voltage across C5. It should be between 22.5 and 25.5 V dc.

d. Connect vtvm across XA5-26 and place POWER switch to ON.

e. Vtvm indication should be between +10 and +26 V dc.

f. Mark position of POWER ADJUST control (R1), and then turn it fully clockwise. Vtvm should indicate +24 to +27 V dc.

g. Turn POWER ADJUST control fully counterclockwise and ensure that vtvm indicates +6 to +10 V dc.

h. Return POWER ADJUST control to its original position, place POWER switch to OFF, and remove vtvm.

i. Replace rear cover.

5.6.2 Modulator Tests

5.6.2.1 AFC Adjustment

Check to see that meter M1 on the modulator module A4 reads in the green area. If not, adjust the AFC ADJUST potentiometer A4R7 so that meter is in the green area. If it cannot be adjusted to the green area, remove the modulator from the card cage and place it on the extender module. Remove the cover and carefully adjust A4R7 to the center of its range (five turns from end stop) then carefully adjust oscillator card A4L5 to center the meter in the green portion of the range. Check adjustment of the AFC ADJUST potentiometer to see that it has control of the meter and that the alarm light is extinguished. Reinstall the cover and replace the module in the card cage.

5.6.2.2 Frequency Adjustment

Adjust FREQ ADJUST capacitor C38 for assigned frequency.

www.SteamPoweredRadio.com

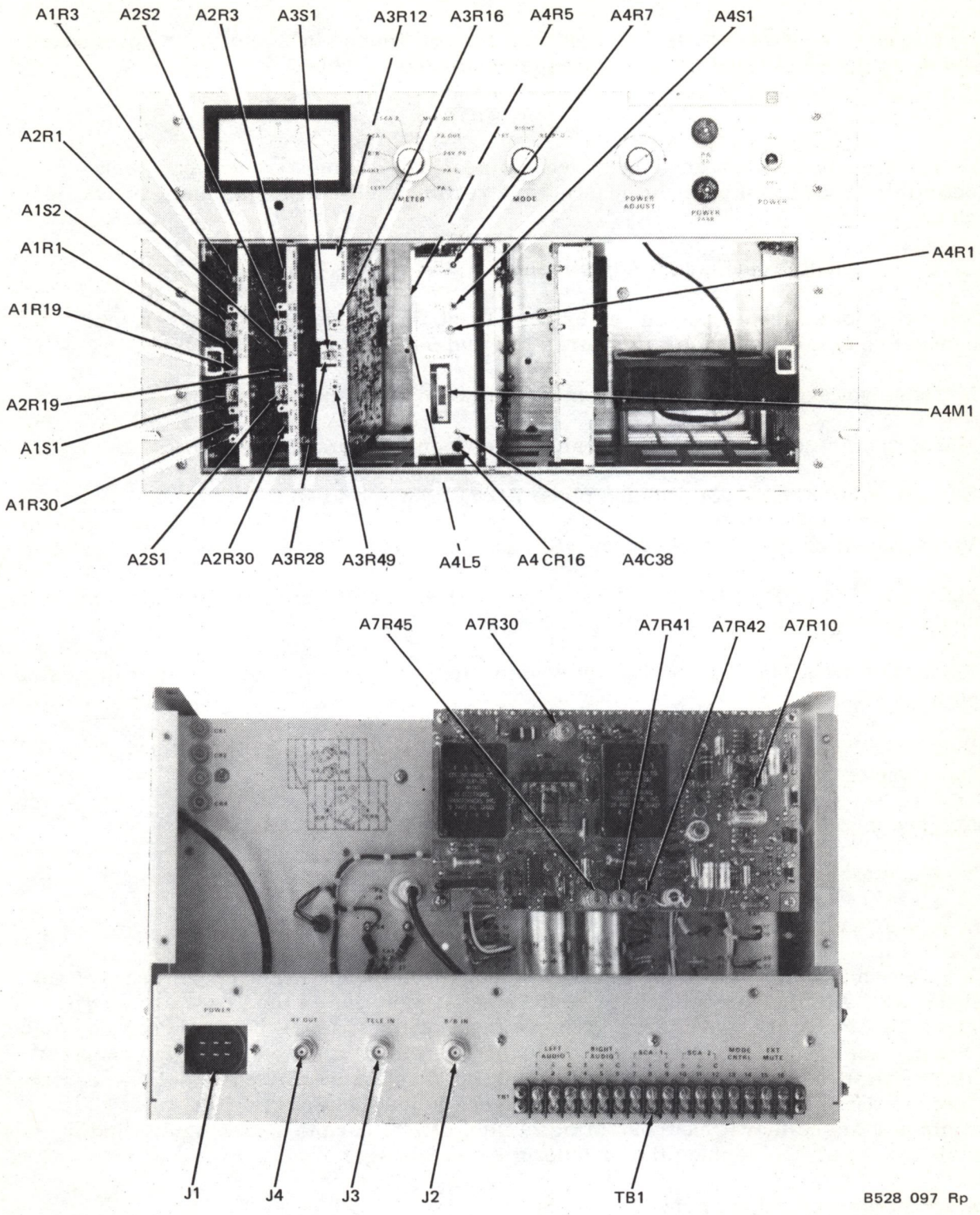

Figure 5-1. 310Z-2 FM Exciter, Maintenance Controls.

www.SteamPoweredRadio.com

Table 5-2. Maintenance Controls.

CONTROL	FUNCTION
786W-1 SCA Generator Card A1/A2	
R3 - modulation level	Sets the sca audio input levels to the sca modulator.
R1 - mute level	Sets the minimum audio level that will activate the sca subcarrier mute circuit.
R30 - output level	Sets the sca subcarrier output level.
R19 - frequency	Sets the sca subcarrier frequency.
S1 - mute enable	ON position enables mute circuit to remote the 67-kHz sca oscillator output when there is no sca audio input. OFF position disables mute circuit for maintenance.
S2 - 7.5-KHZ DEV/3.5-KHZ DEV sca deviation switch	7.5-KHZ position causes the front panel meter to indicate 0 vu when S3 is in the corresponding SCA-( ) position and sca subcarrier deviation is 7.5 kHz.
	3.5-KHZ position causes the front panel meter to indicate 0 vu when S3 is in the corresponding SCA-( ) position and sca subcarrier deviation is 3.5 kHz.
786V-1 Stereo Generator Card A3	
R12 - sideband suppression	Sets the switching point of Q3.
R28 - sideband suppression	Sets the switching point of Q6.
R16 - channel separation	Sets the level of the L + R signal from Q1 and Q4 applied to the multiple output to give proper levels for good stereo channel separation.
R49 - pilot carrier level	Sets the level of the 19-kHz pilot carrier applied to the multiplex output.
S1 - pilot on/off switch	Switches the 19-kHz pilot carrier to the multiplex output.
Modulator Card A4	
R1 - B/B LEVEL	Adjusts baseband modulation sensitivity.
R7 - AFC ADJUST	Adjusts free-running frequency of modulator.

www.SteamPoweredRadio.com

Table 5-2. Maintenance Controls (Cont).

CONTROL	FUNCTION
C38 - FREQ adjust	Sets exciter center frequency.
S1 - AFC ON/OFF	Disables AFC system for test purposes.
R5 - mod bias	Sets bias voltage on modulator diodes for best linearity.
L5 - oscillator frequency	Sets coarse frequency modulator.
CR16 - ALARM	Provides out-of-lock indication for AFC circuit.
M1 - AFC LEVEL meter	Displays AFC voltage.
Audio/Meter Regulator Card A7	
R30 - monaural gain vernier	Matches monaural mode to stereo operation
R10 - meter amplifier adjust	Adjusts meter deflections by 10 percent
R41 - overall gain vernier	Allows matching of both stereo channels
R45 - mid-frequency gain vernier	Same.
R42 - high-frequency gain vernier	Same.

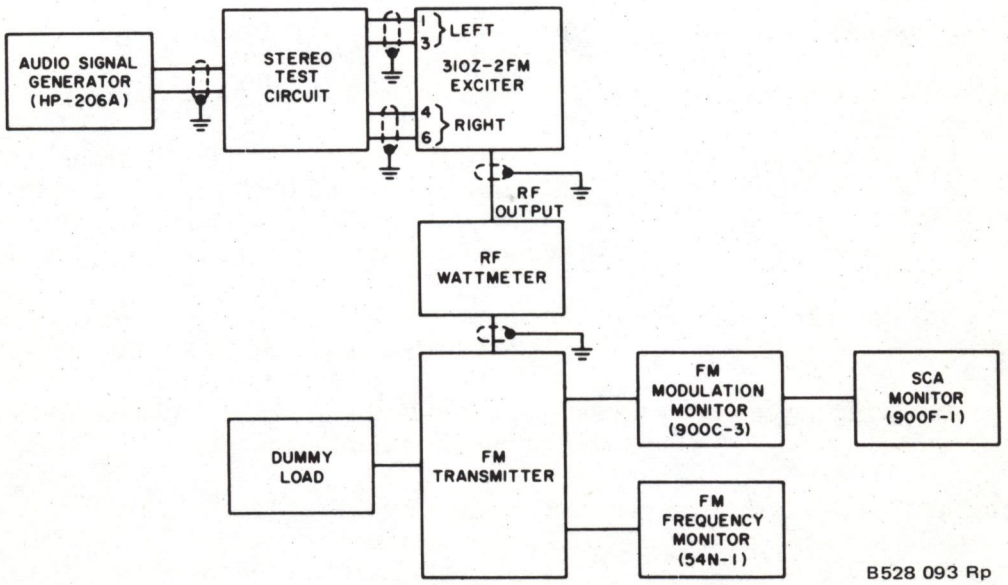

Figure 5-2. Test Equipment Connections to 310Z-2 for Adjustment and Test Procedures.

www.SteamPoweredRadio.com

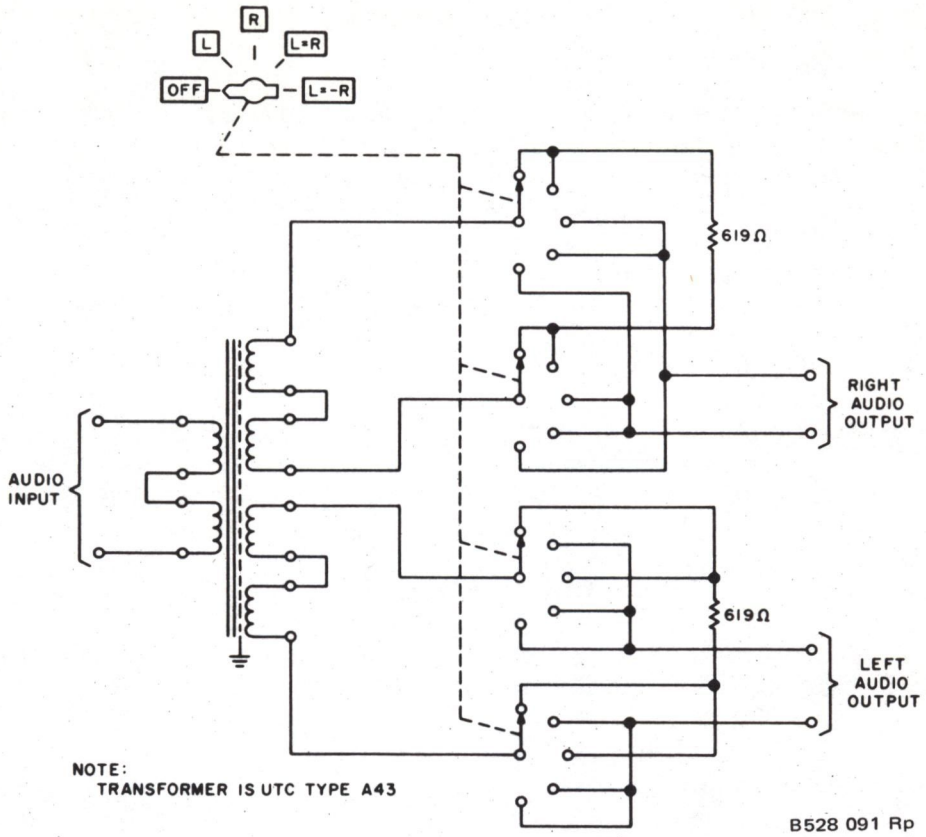

Figure 5-3. Stereo Test Circuit, Schematic Diagram.

5.6.3 Audio Adjustments - Preemphasis Tracking and Linear Crosstalk

Read and understand procedures for measurement of main and subchannel audio in modulation monitor instruction manual. Connect 310Z-2 exciter as shown in figure 5-2, and set S2 to stereo mode.

a. Set A7R41, A7R42, and A7R45 to midrange.

b. Set stereo selector to L = R and set audio oscillator for 100 percent total modulation with pilot switch off at 150 Hz.

c. Set monitor to read L = -R or subchannel audio. Adjust A7R41 for minimum reading.

d. Set audio oscillator to 1500 Hz and adjust oscillator for 100 percent total modulation. Read subchannel audio and adjust A7R45 for minimum reading.

e. Readjust audio oscillator to 15 kHz and modulation to 100 percent total. Set monitor to read subchannel audio. Adjust A7R42 for minimum reading.

f. Repeat steps b. through e. and optimize all three adjustments for best overall crosstalk.

www.SteamPoweredRadio.com

g. Repeat steps b. through e. without readjustment of A7R41, A7R42, and A7R45 feeding L = -R and reading main channel audio.

h. Make minor readjustments to A7R41, A7R42, and A7R45 if necessary for best overall crosstalk measurements from subchannel to main channel and main channel to subchannel. They should exceed 45 dB for all frequencies from 50 Hz to 15 kHz.

i. Set up exciter in STEREO mode and feed +10 dB mW at 400 Hz into the left channel. Turn on the 19-kHz pilot and adjust it to 9 percent. Read total modulation on the modulation monitor. Adjust B/B LEVEL control A4R1 on the modulator for 100 percent.

j. Set exciter to left mono mode and adjust A7R30 for 100-percent modulation.

5.6.4 SCA Generator Output Level Adjustment

a. With equipment connected as shown in figure 5-2, set MODULATOR METER switch on FM modulation monitor to SCA MOD.

b. Place MUTE ENABLE switch (on sca generator card) to OFF.

c. Adjust OUTPUT LEVEL control R30 for 10-percent modulation as indicated on the 0- to 30-percent scale on FM modulator monitor.

d. Turn MUTE ENABLE switch to ON and note that indication on the FM modulation monitor decreases to zero.

5.6.5 SCA Generator Frequency Adjustment

a. With equipment connected as shown in figure 5-2, turn stereo test circuit switch to OFF.

b. Check the sca output frequency as indicated on the sca frequency monitor (Collins 900F-1 or equivalent).

c. Adjust A1R19 until sca frequency monitor indicates 67 kHz.

5.6.6 Stereo Generator Adjustment

a. Connect equipment as shown in figure 5-2.

b. Set MODE switch on 310Z-2 front panel to STEREO.

c. Set MODULATION METER switch on FM modulator monitor to TOTAL MOD.

d. Place 19-kHz pilot carrier switch on stereo generator card to ON.

e. Turn stereo test circuit (figure 5-3) switch to L position (left modulation only).

f. Set audio oscillator (HP206A or equivalent) to 5000 Hz and adjust the output amplitude for 100-percent total modulation on FM modulation monitor.

g. Read separation on monitor and adjust R16 on the stereo generator for best separation.

www.SteamPoweredRadio.com

5.7 MINIMUM PERFORMANCE STANDARDS

The 310Z-2 should be tested in accordance with the following procedures after alignment and adjustment. In addition, the following tests should be used to determine if the 310Z-2 is operating properly. Table 5-3 lists those tests that are applicable to monaural, stereo, and SCA functions of the 310Z-2. If it is desired to test the 310Z-2 for monaural only, perform only those tests listed in table 5-3 for monaural, etc.

5.7.1 Output Frequency

a. Connect the equipment as shown in figure 5-2, and turn stereo test circuit switch to OFF.

b. Place POWER switch to ON and measure output frequency. Allow 10 minutes warmup.

c. If the output frequency is incorrect (should be the customer-selected frequency of 88 to 108 MHz), readjust the frequency control on the FM modulator.

5.7.2 Output Power

a. Connect equipment as shown in figure 5-2.

b. Adjust OUTPUT POWER control until rf wattmeter indicates desired power output.

5.7.3 FM Noise

a. Connect the equipment as shown in figure 5-2.

b. Turn MODE switch on 310Z-2 to LEFT.

c. Turn MODULATION METER switch on the FM modulation monitor to TOTAL MOD.

d. Turn stereo test circuit switch to L.

e. Set output of audio oscillator to 400 Hz and 100-percent modulation as indicated on the FM modulation monitor.

f. Turn DECIBELS switch on FM modulation monitor to 0 and METER switch to MAIN CHAN AUDIO.

g. Turn METER ADJUST control until 0 dB is indicated on FM modulation monitor front panel meter.

h. Remove 400-Hz monaural input signal and turn the DECIBELS switch clockwise until a reading is observed on the meter.

i. The main channel FM noise is the algebraic sum of the DECIBELS switch and the meter indication, and should be no more than -65 dB.

j. Turn METER switch to SUB CHAN AUDIO.

k. The subchannel FM noise is the algebraic sum of the DECIBELS switch setting and the meter indication, and it should be no more than -65 dB.

www.SteamPoweredRadio.com

Table 5-3. Tests.

MONAURAL (PARA NO.)	STEREO (PARA NO.)	SCA (PARA NO.)	TEST
5.7.1	5.7.1	5.7.1	Output frequency
5.7.2	5.7.2	5.7.2	Output power
5.7.3	5.7.3	5.7.3	FM noise
5.7.4			Frequency response (monaural)
5.7.5			Harmonic distortion (monaural)
	5.7.6		Frequency response (stereo)
	5.7.7		Harmonic distortion (stereo)
	5.7.8		Subcarrier suppression
	5.7.9		Channel separation
	5.7.10		Main-to-subchannel crosstalk
	5.7.11		Subchannel-to-main crosstalk
		5.7.12	Sca input test
		5.7.13	Sca noise test
		5.7.14	Sca mute test
		5.7.15	Sca frequency response

5.7.4 Frequency Response (Monaural)

a. With the equipment connected as shown in figure 5-2, set the MOD switch on the 310Z-2 to LEFT and the stereo test circuit switch to L.

b. Set the audio generator (HP206A or equivalent) for a frequency of 50 Hz.

c. Adjust the output of the audio generator for 100-percent modulation as indicated on the FM modulation monitor.

www.SteamPoweredRadio.com

d. Vary the audio generator and maintain 100-percent modulation for frequencies of 100, 400, 1000, 5000, 7500, 10,000 and 15,000 Hz.

e. Ensure that attenuator settings for each frequency are within the limits of the 75-microsecond preemphasis curve as defined by the FCC.

5.7.5 Harmonic Distortion (Monaural)

a. Connect the equipment as shown in figure 5-2.

b. Turn MODE switch on the 310Z-2 to the LEFT position.

c. Turn MODULATION METER switch on the FM modulation monitor (900C-3) to TOTAL MOD and the DE-EMPHASIS switch to IN.

d. Turn stereo test circuit switch to L.

e. Set the audio oscillator (HP206A) to 50 Hz, and adjust the output amplitude for 100-percent total modulation on the FM modulation monitor.

f. Turn MODULATION METER switch on FM modulation monitor to MAIN CHAN AUDIO.

g. Connect distortion meter (HP334A or equivalent) to the DISTORTION METER jack on the FM modulation monitor.

h. Ensure that the distortion meter indication is not more than 0.25 percent.

i. Repeat steps e. through h. for modulating frequencies of 100, 400, 1000, 5000, 7500, 10,000 and 15,000 Hz.

5.7.6 Frequency Response (Stereo)

a. With equipment connected as shown in figure 5-2, set the MODULATION switch on the 310Z-2 to STEREO and the stereo test circuit switch to LEFT.

b. Turn on 19-kHz pilot.

c. Repeat steps b. through e. of paragraph 5.7.4.

d. Place STEREO TEST CIRCUIT switch to RIGHT.

e. Repeat steps b. through e. of paragraph 5.7.4.

5.7.7 Harmonic Distortion (Stereo)

a. With equipment connected as shown in figure 5-2, place PILOT CARRIER switch to ON.

b. Turn MODE switch on 310Z-2 to STEREO.

c. Turn MODULATION METER switch on 900C-3 to TOTAL MOD, and place DE-EMPHASIS switch to OUT.

If You Didn't Get This From My Site,
Then It Was Stolen From....
www.SteamPoweredRadio.com

d. Set switch on stereo test circuit (figure 5-3) to L = R.

e. Set audio oscillator (HP206A) to 50 Hz, and adjust output amplitude for 100-percent total modulation on 900C-3.

f. Connect distortion meter (HP334A or equivalent) to LEFT AUDIO jack on the 900C-3.

g. Measure and record total distortion for modulating frequencies of 50, 100, 400, 1000, 5000 and 7500 Hz. Maintain modulation on 900C-3 at 100 percent for all frequencies, and distortion should be not more than 0.5 percent.

h. Connect distortion meter to RIGHT AUDIO jack on 900C-3 and repeat step g.

5.7.8 Subcarrier Suppression

a. With equipment connected as shown in figure 5-2, place PILOT CARRIER switch to OFF.

b. Ensure that there is no input to the SCA generator of the 310Z-2 exciter.

c. Turn DECIBELS switch on FM modulation monitor to 0.

d. Turn METER switch on FM modulation monitor to TOTAL MOD.

e. Adjust the audio generator for a frequency of 15,000 Hz, and adjust the amplitude for 90-percent modulation indication on the FM modulation monitor.

f. Turn METER switch on FM modulation monitor to MAIN CHAN AUDIO, and adjust METER ADJUST control until meter indicates 0 dB.

g. Turn METER switch on FM modulation monitor to SUBCAR, and rotate the DECIBELS switch in a clockwise direction until a meter indication is observed.

h. The setting of the DECIBELS switch indicates the subcarrier suppression; it should be at least -45 dB.

5.7.9 Channel Separation

It is recommended that the channel separation test be performed using the Collins 900C-3 FM Modulation Monitor.

a. Connect equipment as shown in figure 5-2.

b. Turn MODULATION switch on front panel of 310Z-2 to STEREO.

c. Turn MODULATION METER switch on FM modulation monitor (900C-3) to TOTAL MOD.

d. Place 19-kHz PILOT CARRIER switch A2A1 to ON.

e. Turn stereo test circuit switch to L.

www.SteamPoweredRadio.com

f. Set audio generator (HP206A) to 5000 Hz, and adjust output amplitude for 100-percent total modulation on FM modulation monitor.

g. Set METER switch on front panel of FM modulation monitor to LEFT AUDIO.

h. Set DECIBELS switch on front panel of FM modulation monitor to 0, and turn METER ADJUST control until an indication of 0 dB is obtained on the front panel meter.

i. Switch from left channel modulation to right channel modulation, and turn DECIBELS switch in a clockwise direction until an indication is observed on the front panel meter.

j. Adjust A3R16 for best channel separation indicated on meter. The channel separation is the algebraic sum of the DECIBELS switch setting and the meter indication.

k. Repeat steps f. through j. for frequencies of 50, 100, 400, 1000, 5000, 7500, 10,000 and 15,000 Hz, except do not readjust A3R16.

l. To obtain channel separation measurements with audio applied to the right channel and measurements taken in the left channel, repeat steps e. through i. and substitute left for right and right for left where these instructions are indicated, but do not readjust A3R16.

5.7.10 Main Channel to Subchannel Nonlinear Crosstalk

a. Connect the equipment as shown in figure 5-4. The crosstalk test circuit shown on figure 5-5 must be fabricated for this test.

b. Set the crosstalk test circuit switch to MAIN and the FREQ RANGE SELECT switch to 50/400.

c. Turn the MODULATION switch on the 310Z-2 to STEREO.

d. Adust the audio generator (HP206A or equivalent) to a frequency of 50 Hz, and adjust the output level for 90-percent main channel modulation as indicated on the FM modulation monitor.

e. On the FM modulation monitor, place the METER switch to MAIN CHAN AUDIO, turn the DECIBELS switch to 0, and turn the METER ADJUST control until 0 dB is indicated on the meter.

f. Turn METER switch to SUB CHAN AUDIO, and turn DECIBELS switch clockwise until an indication on the front panel meter of the FM modulation monitor is observed.

g. Turn adjustments on crosstalk test circuit until a null is observed on the FM modulation monitor meter.

NOTE

These adjustments are critical and require special attention to achieve the proper null.

www.SteamPoweredRadio.com

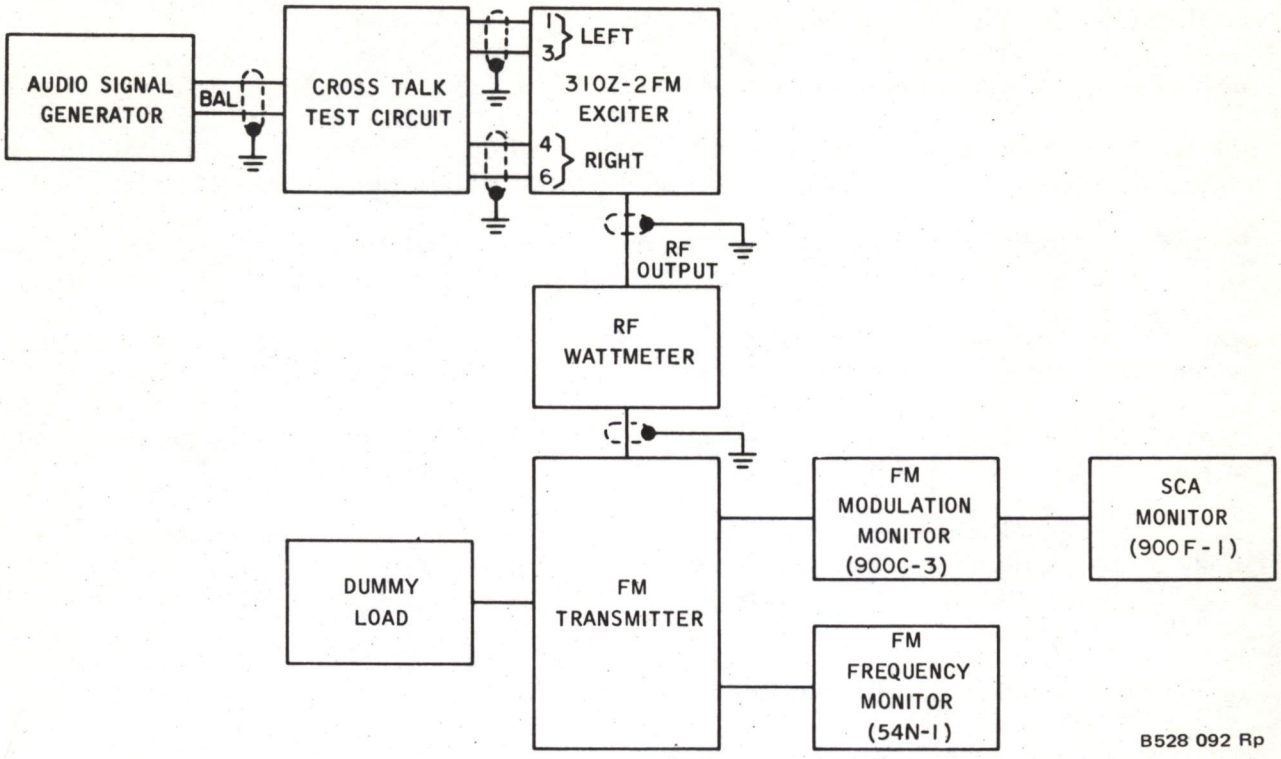

Figure 5-4. Test Equipment Connections to 310Z-2 for Crosstalk Test.

h. Crosstalk is the algebraic sum of the DECIBELS switch setting and the meter indication. The main channel into subchannel crosstalk should be not more than -50 dB from 50 to 15,000 Hz.

i. Repeat the above procedure for frequencies of 100, 400, 1000, 5000, 7500, 10,000 and 15,000 Hz. Ensure that the proper frequency range is selected by the FREQ RANGE SELECT switch of the crosstalk test circuit.

5.7.11 Subchannel to Main Channel Nonlinear Crosstalk

a. With the test equipment connected as shown in figure 5-4, set the crosstalk test circuit switch to SUB and the FREQ RANGE SELECT switch to 50/400.

b. Adjust the audio generator (HP206A or equivalent) to a frequency of 50 Hz, and adjust the output level for 90-percent subchannel modulation as indicated on the FM modulation monitor.

c. Turn METER switch to MAIN CHAN AUDIO, and turn DECIBELS switch clockwise until an indication is observed.

5.7.12 SCA Input Test

a. With the equipment connected as shown in figure 5-2, place the MODULATION METER switch on the FM modulation monitor to SCA MOD.

www.SteamPoweredRadio.com

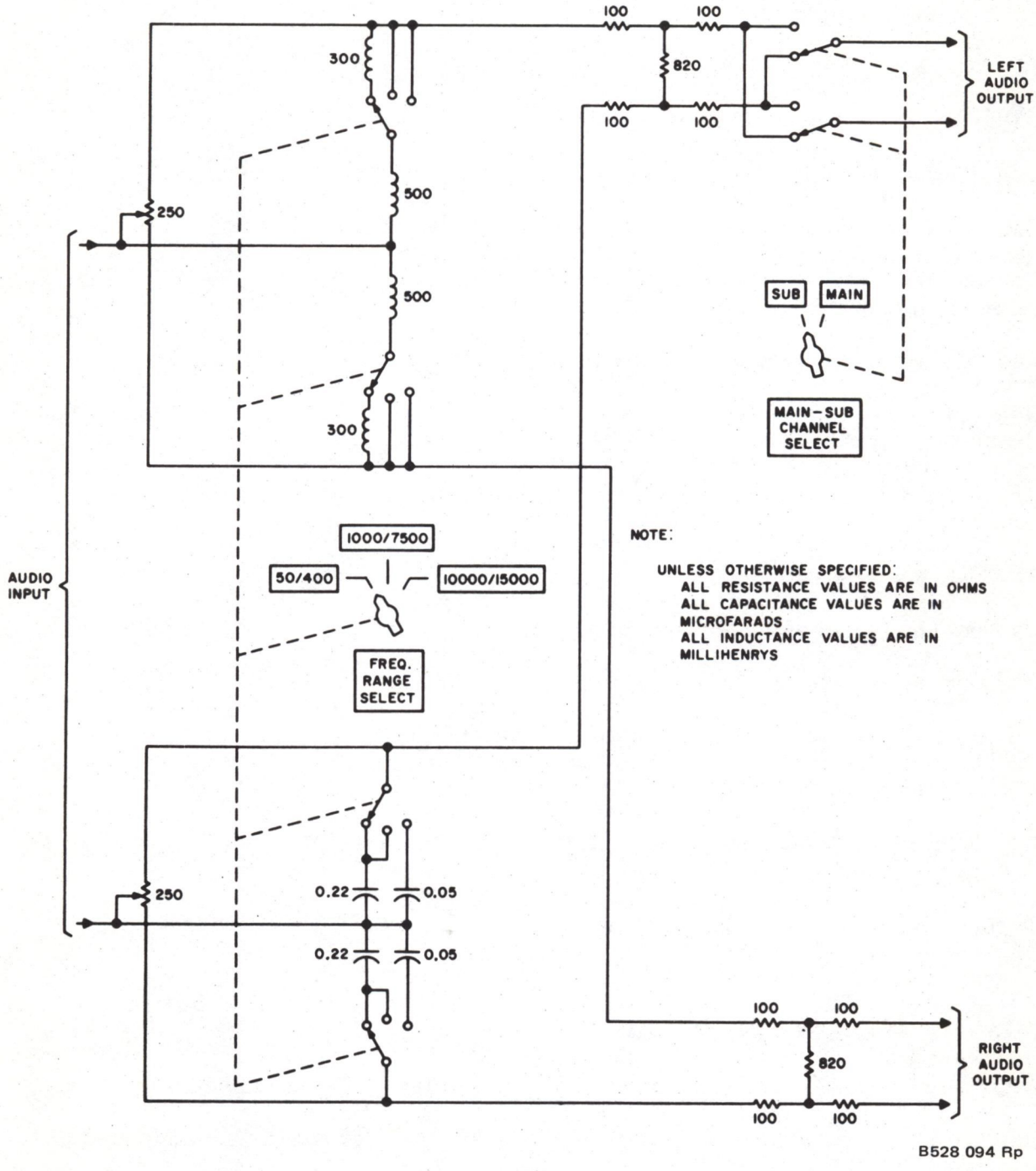

Figure 5-5. Nonlinear Crosstalk Test Circuit, Schematic Diagram.

www.SteamPoweredRadio.com

b. Place MUTE ENABLE switch (on sca generator card) to OFF.

c. Place POWER switch to ON, and adjust SCA OUTPUT LEVEL control A1R30 for an indication of 10-percent modulation on the 0- to 30-percent scale on the meter of the FM modulation monitor.

5.7.13 SCA Noise Test

a. With equipment connected as in figure 5-2, place MUTE DISABLE switch to OFF.

b. Connect audio generator (HP206A) to sca input terminals of exciter.

c. Set the audio generator for a frequency of 400 Hz and an output level of +10 dB mW.

d. Connect ac voltmeter (HP403B) across the audio output (TB1-1 and TB1-2) of the sca modulation monitor (900F-1).

e. Record the 400-Hz reference signal level as indicated on the ac voltmeter.

f. Remove the sca input signal from the 310Z-2 exciter, and increase the sensitivity of the ac voltmeter until a reading is indicated.

g. The difference between the levels recorded in steps e. and f. should be not less than 55 dB.

5.7.14 SCA Mute Circuit Test

a. Connect equipment as shown in figure 5-2.

b. Connect audio signal generator (HP206A) to terminals TB1-10 and TB1-12.

c. Place PILOT CARRIER switch on stereo generator card to OFF.

d. Turn stereo test circuit switch to OFF.

e. Adjust audio signal generator connected to terminals TB1-10 and TB1-12 for 400 Hz at 6 dB mW.

f. Turn MUTE LEVEL control A1R1 fully counterclockwise.

g. Observe the sca subcarrier level on the sca monitor.

h. Place MUTE ENABLE switch to ON.

i. After a few seconds, note that the sca subcarrier level is still indicated on sca monitor.

j. Remove input to sca generator card, and observe that sca subcarrier indicated on sca monitor is (decreased to zero) within 3 to 4 seconds.

k. Adjust audio signal generator for 400 Hz at 6-dB mW input to exciter.

www.SteamPoweredRadio.com

l. Adjust attenuator on signal generator to reduce input level 30 dB.

m. Observe the sca subcarrier on sca monitor, and ensure that is still present after 3 to 4 seconds indicating that mute circuit did not cut off carrier.

n. Remove audio signal generator.

5.7.15 SCA Frequency Response

a. With equipment connected as in figure 5-2, place the pilot carrier switch on stereo generator card to OFF.

b. Connect audio generator (HP206A) to sca input terminals TB1-7 and TB1-9 (21 kHz) or TB1-10 and TB1-12 (67 kHz) of exciter.

c. Turn stereo test circuit switch to OFF.

d. Turn METER switch on sca modulation monitor (900F-1) to sca modulation monaural mode.

e. Set audio generator frequency to 50 Hz, and adjust output amplitude for 3.5-kHz deviation on the sca modulation monitor.

f. While maintaining 3.5-kHz deviation, vary the audio generator frequency to 100, 400, 1000, and 5000 Hz. The audio generator attenuator settings for each frequency should follow the 75-microsecond preemphasis curve as specified by the FCC.

5.8 FREQUENCY CHANGE

If it is desired to change the output frequency of the 310Z-2, crystal A4Y1 located in the oven on the modulator card must be changed. Table 5-4 lists the channel frequency versus crystal frequency and the Collins part number for each crystal.

www.SteamPoweredRadio.com

Table 5-4. Crystal Part Number.

CHANNEL FREQ (MHz)	CRYSTAL FREQ (kHz)	COLLINS PART NUMBER	CHANNEL FREQ (MHz)	CRYSTAL FREQ (kHz)	COLLINS PART NUMBER
88.1	1376.5625	289-7246-010	96.1	1501.5625	289-7246-410
88.3	1379.6875	289-7246-020	96.3	1504.6875	289-7246-420
88.5	1382.8125	289-7246-030	96.5	1507.8125	289-7246-430
88.7	1385.9375	289-7246-040	96.7	1510.9375	289-7246-440
88.9	1389.0625	289-7246-050	96.9	1514.0625	289-7246-450
89.1	1392.1875	289-7246-060	97.1	1517.1875	289-7246-460
89.3	1395.3125	289-7246-070	97.3	1520.3125	289-7246-470
89.5	1398.4375	289-7246-080	97.5	1523.4375	289-7246-480
89.7	1401.5625	289-7246-090	97.7	1526.5625	289-7246-490
89.9	1404.6875	289-7246-100	97.9	1529.6875	289-7246-500
90.1	1407.8125	289-7246-110	98.1	1532.8125	289-7246-510
90.3	1410.9375	289-7246-120	98.3	1535.9375	289-7246-520
90.5	1414.0625	289-7246-130	98.5	1539.0625	289-7246-530
90.7	1417.1875	289-7246-140	98.7	1542.1875	289-7246-540
90.9	1420.3125	289-7246-150	98.9	1545.3125	289-7246-550
91.1	1423.4375	289-7246-160	99.1	1548.4375	289-7246-560
91.3	1426.5625	289-7246-170	99.3	1551.5625	289-7246-570
91.5	1429.6825	289-7246-180	99.5	1554.6875	289-7246-580
91.7	1432.8125	289-7246-190	99.7	1557.8125	289-7246-590
91.9	1435.9375	289-7246-200	99.9	1560.9375	289-7246-600
92.1	1439.0625	289-7246-210	100.1	1564.0625	289-7246-610
92.3	1442.1825	289-7246-220	100.3	1567.1875	289-7246-620
92.5	1445.3125	289-7246-230	100.5	1570.3125	289-7246-630
92.7	1448.4375	289-7246-240	100.7	1573.4375	289-7246-640
92.9	1451.5625	289-7246-250	100.9	1576.5625	289-7246-650
93.1	1454.6875	289-7246-260	101.1	1579.6875	289-7246-660
93.3	1457.8125	289-7246-270	101.3	1582.8125	289-7246-670
93.5	1460.9375	289-7246-280	101.5	1585.9375	289-7246-680
93.7	1464.0625	289-7246-290	101.7	1589-0625	289-7246-690
93.9	1467.1875	289-7246-300	101.9	1592.1875	289-7246-700
94.1	1470.3125	289-7246-310	102.1	1595.3125	289-7246-710
94.3	1473.4375	289-7246-320	102.3	1598.4375	289-7246-720
94.5	1476.5625	289-7246-330	102.5	1601.5625	289-7246-730
94.7	1479.6875	289-7246-340	102.7	1604.6875	289-7246-740
94.9	1482.8125	289-7246-350	102.9	1607.8125	289-7246-750
95.1	1485.9375	289-7246-360	103.1	1610.9375	289-7246-760
95.3	1489.0625	289-7246-370	103.3	1614.0625	289-7246-770
95.5	1492.1875	289-7246-380	103.5	1617.1875	289-7246-780
95.7	1495.3125	289-7246-390	103.7	1620.3125	289-7246-790
95.9	1498.4375	289-7246-400	103.9	1623.4375	289-7246-800

www.SteamPoweredRadio.com

Table 5-4. Crystal Part Number (Cont).

CHANNEL FREQ (MHz)	CRYSTAL FREQ (kHz)	COLLINS PART NUMBER	CHANNEL FREQ (MHz)	CRYSTAL FREQ (kHz)	COLLINS PART NUMBER
104.1	1626.5625	289-7246-810	106.1	1657.8125	289-7246-910
104.3	1629.6875	289-7246-820	106.3	1660.9375	289-7246-920
104.5	1632.8125	289-7246-830	106.5	1664.0625	289-7246-930
104.7	1635.9375	289-7246-840	106.7	1667.1875	289-7246-940
104.9	1639.0625	289-7246-850	106.9	1670.3125	289-7246-950
105.1	1642.1875	289-7246-860	107.1	1673.4375	289-7246-960
105.3	1645.3125	289-7246-870	107.3	1676.5625	289-7246-970
105.5	1648.4375	289-7246-880	107.5	1679.6875	289-7246-980
105.5	1651.5625	289-7246-890	107.7	1682.8125	289-7246-990
105.9	1654.6875	289-7246-900	107.9	1685.9375	289-7247-010

www.SteamPoweredRadio.com

6.1 GENERAL

This section provides parts lists and parts locations for all electrical components of the 310Z-2 FM Exciter. Figures 6-1 through 6-3 provide general views of the 310Z-2 FM Exciter with various access panels removed. The remaining figures with their corresponding parts lists identify all electrical components. These figures and parts lists are in order according to assembly reference designation.

6.2 ORDERING REPLACEMENT PARTS

Refer to the information inside the front cover for instructions on how to order replacement parts.

www.SteamPoweredRadio.com

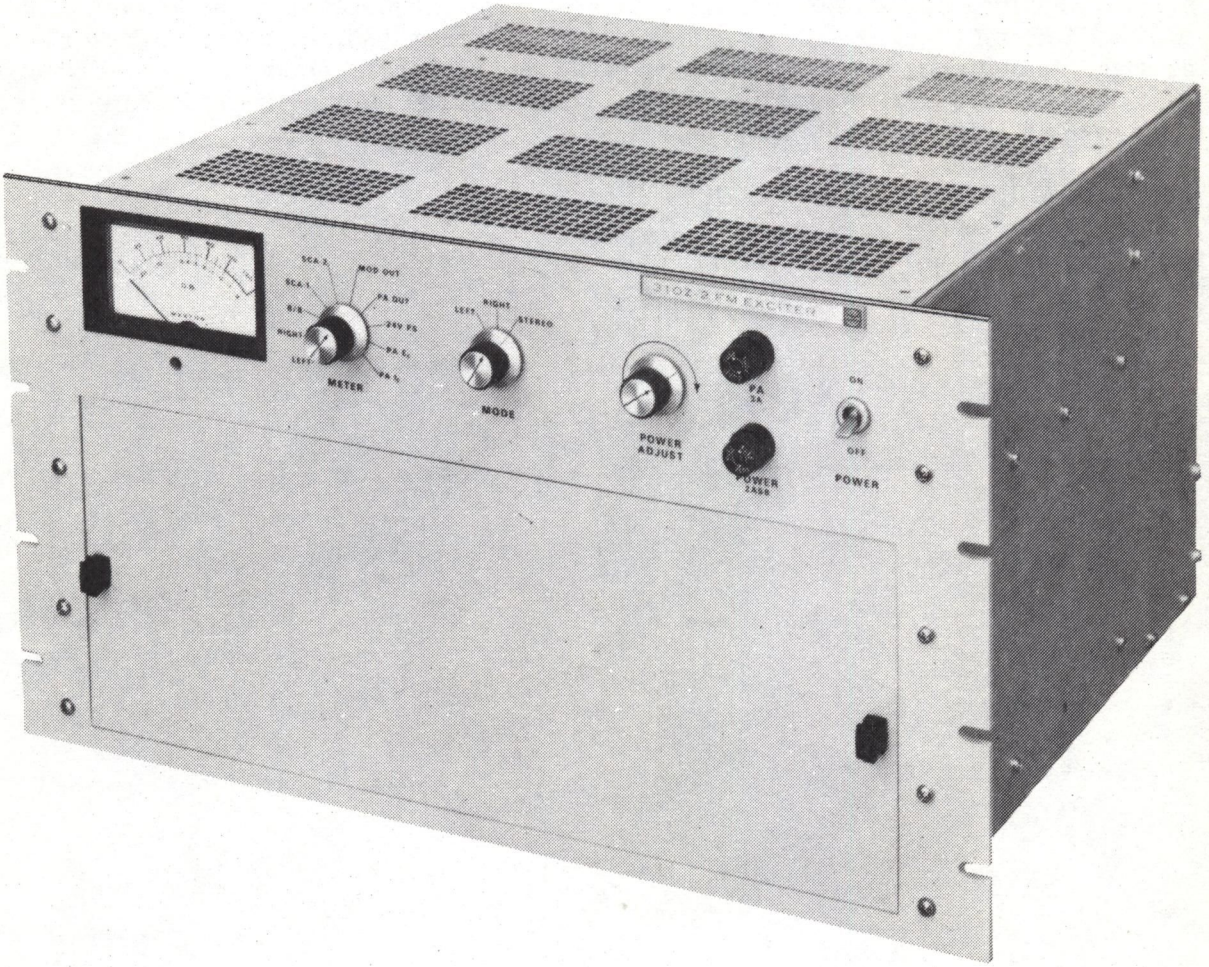

B700 3285 Rp

Figure 6-1. 310Z-2 FM Exciter (Sheet 1 of 3).

If You Didn't Get This From My Site,
Then It Was Stolen From....
www.SteamPoweredRadio.com

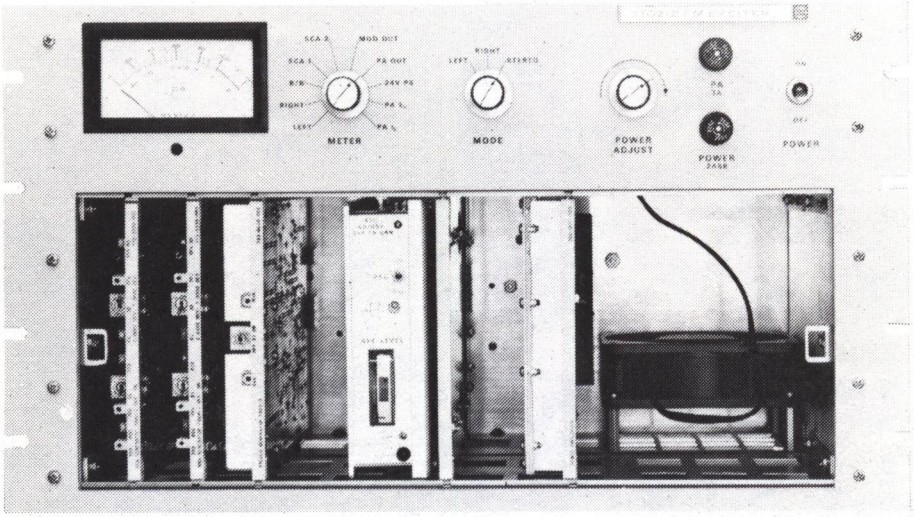

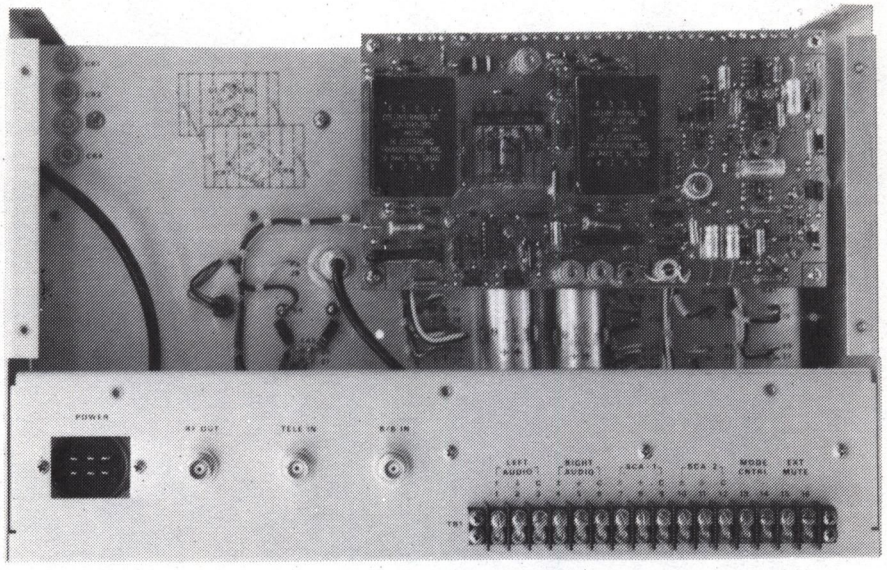

B700 3283 Rp

Figure 6-2. 310Z-2 FM Exciter (Sheet 2 of 3).

www.SteamPoweredRadio.com

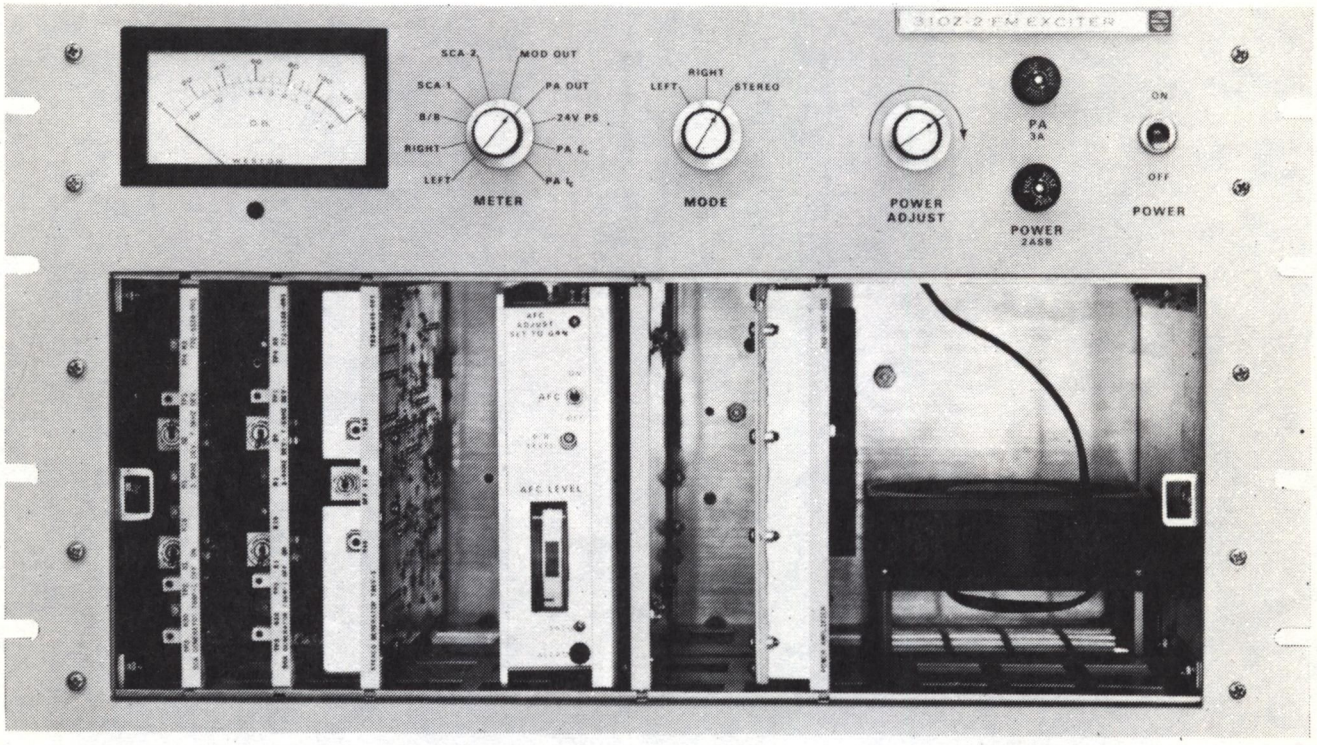

B700 3284 Rp

Figure 6-3. 310Z-2 FM Exciter (Sheet 3 of 3).

www.SteamPoweredRadio.com

SYMBOL	DESCRIPTION			COLLINS PART NUMBER
	310Z-2 FM EXCITER			622-2184-001
	EXTENDER BOARD			781-5365-001
A1	SCA GENERATOR 786W-1			772-5338-001
A2	SCA GENERATOR 786W-1			772 5338-001
A3	STL INTERFACE 785E-1			622-2374-001
A3	STEREO GENERATOR 786V-1			783-6648-001
A4	MODULATOR/EXCITER			627-6695-001
A5	POWER AMPLIFIER			769-0830-001
A6	AUDIO/MTR REGULATOR			627-9773-001
B1	BLOWER			009-1829-030
C1	CAPACITOR	3900UF	50 V	183-1278-370
C2	CAPACITOR	3900UF	50 V	183 1278-370
C3	CAPACITOR	1000PF	500 V	913-1292-000
C4	CAPACITOR	1000UF	50 V	183-1282-140
C5	CAPACITOR	1000UF	50 V	183 1282-140
C6	CAPACITOR	1000UF	50 V	183-1282-140
C7	CAPACITOR	1000PF	500 V	913-1292-000
C8	CAPACITOR	1000PF	500 V	913 1292-000
C9	CAPACITOR	1000PF	500 V	913-1292-000
C10	CAPACITOR	1000PF	500 V	913 1292-000
C11	CAPACITOR	1000PF	500 V	913-1292-000
C12	CAPACITOR	1000PF	500 V	913 1292-000
C13	CAPACITOR	1000PF	500 V	913-1292-000
C14	CAPACITOR	1000PF	500 V	913 1292-000
C15	CAPACITOR	1000PF	500 V	913-1292-000
C16	CAPACITOR	1000PF	500 V	913 1292-000
C17	CAPACITOR	1000PF	500 V	913-1292-000
C18	CAPACITOR	0.1UF	200 V	913-3681-000
C19	CAPACITOR	0.1UF	200 V	913 3681-000
C20	CAPACITOR	0.1UF	200 V	913-3681-000
C21	CAPACITOR	100PF	500 V	912-2816-000
CR1	DIODE	1N1202		353-1889-000
CR2	DIODE	1N1202		353 1889-000
CR3	DIODE	1N1202		353-1889-000
CR4	DIODE	1N1202		353 1889-000
CR5	DIODE	1N4003		353-6442-030
CR6	DIODE	1N4003		353 6442-030
CR7	DIODE	1N4003		353-6442-030
CR8	DIODE	1N4003		353 6442-030
E1	TERMINAL			547-5305-002
E2	TERMINAL			304-2800-000
E3	TERMINAL			304 2800-000
E4	TERMINAL			304-2800-000
E5	TERMINAL			304 2800-000
E6	TERMINAL			304-2800-000
E7	TERMINAL			304 2800-000
E8	TERMINAL			304-0116-000
E9	TERMINAL			304 0116-000
E10	TERMINAL			304-1089-000
E11	TERMINAL			304-0116-000
E12	TERMINAL			304 0116-000
F1	FUSE	2ASB		264-0297-000
F2	FUSE	3A		264-0928-050
FL1	FILTER, LP			673-1162-020
HT1	HEATSINK			015-3612-010
HT2	HEATSINK			015-3612-020
J1	CONNECTOR			365-0034-000
J2	BNC CONNECTOR			357-9248-010
J3	BNC CONNECTOR			357 9248-010
J4	BNC CONNECTOR			357-9248-010
J5	CONNECTOR			357-7109-000
J6	CONNECTOR			357 7109-000
J7	CONNECTOR			357-7109-000
P2	TNC CONNECTOR			357-9666-000
P3	TNC CONNECTOR			357 9666-000
P4	TNC CONNECTOR			357-9666-000
Q1	TRANSISTOR	2N3054		352-0581-010

D-2041 (9-65)

www.SteamPoweredRadio.com

SYMBOL	DESCRIPTION			COLLINS PART NUMBER
Q2	TRANSISTOR	2N3055		352-0583-010
R1	RESISTOR, VARIABLE	5 K		376-2487-000
R2	RESISTOR, VARIABLE	10 K		380-2264-000
R3	RESISTOR	0.1	3 W	747-5115-000
R4	RESISTOR	68.1 K	1 W	705-7184-000
R5	RESISTOR	1.5	10 W	747-8531-000
R6	RESISTOR	10	10 W	747-8954-000
R7	RESISTOR	10	10 W	747-8954-000
R8	RESISTOR	22	1 W	745-3282-000
R9	RESISTOR	3.83 K	1/2 W	705-7124-000
R10	RESISTOR	464	1/2 W	705-7080-000
R11	RESISTOR	2700	1 W	745-3370-000
R12	RESISTOR	2.2 K	1/4 W	745-0761-000
R13	RESISTOR	47 K	1/4 W	745-0809-000
S1	SWITCH			266-5376-010
S2	SWITCH MODE			359-9475-130
S3	SWITCH METER			359-9475-310
T1	TRANSFORMER POWER			662-0318-010
TB1	TERMINAL BOARD			367-0024-000
U1	REGULATOR	7824KC		351-1120-040
U2	REGULATOR	7824KC		351 1120-040
XF1	FUSEHOLDER			265-1171-000
XF2	FUSEHOLDER			265 1171-000
XFL1	SOCKET			220-1005-000
XQ1	SOCKET	TO-66		220-0968-020
XQ2	SOCKET	TO-3		220-0968-010
XU1	SOCKET	TO-3		220 0968-010
XU2	SOCKET	TO-3		220-0968-010

D-2041 (9-65)

www.SteamPoweredRadio.com

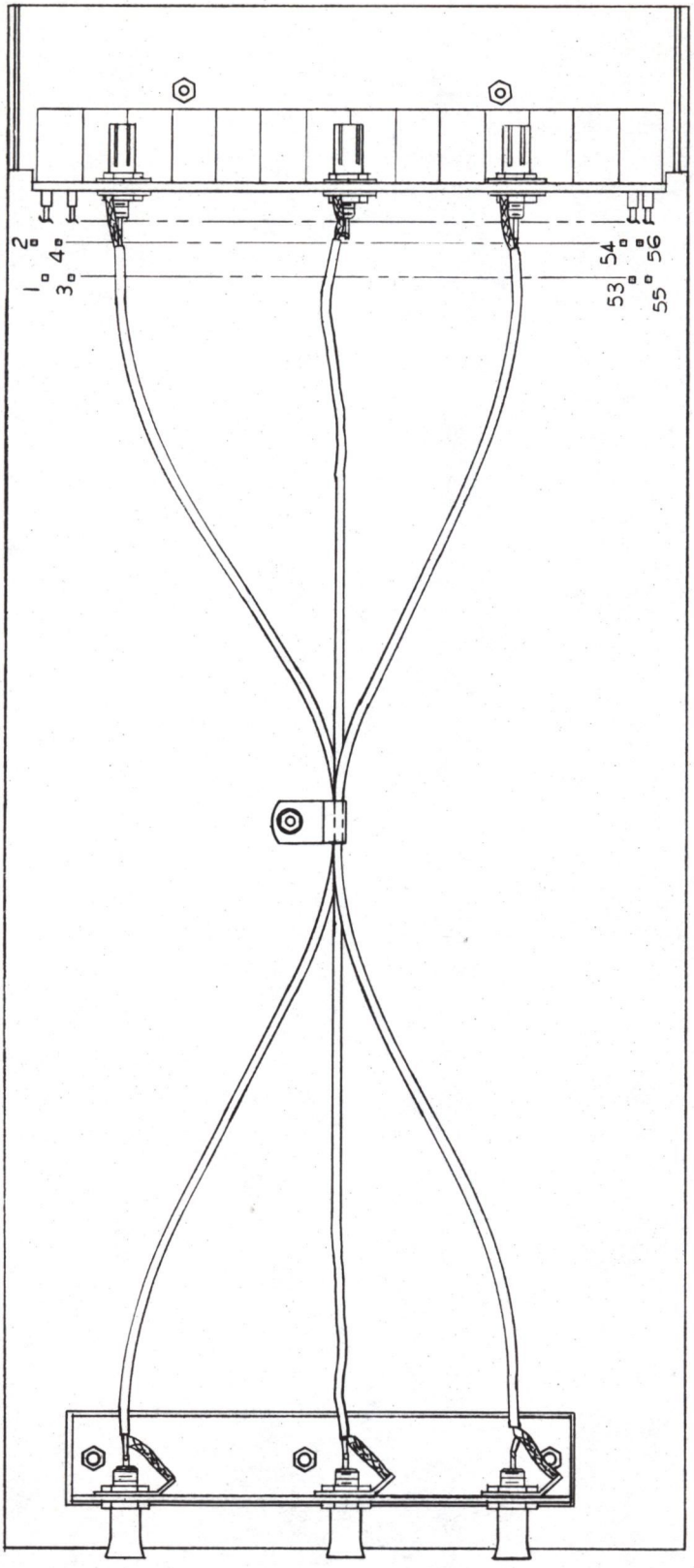

B700 3267 Rp

Figure 6-4. Extender Board.

www.SteamPoweredRadio.com

SYMBOL	DESCRIPTION	COLLINS PART NUMBER
	EXTENDER BOARD	781-5365-001
J1	CONNECTOR	357-9210-000
J2	CONNECTOR	357 9210-000
J3	CONNECTOR	357-9210-000
J4	CONNECTOR	357-9211-000
J5	CONNECTOR	357 9211-000
J6	CONNECTOR	357-9211-000
J7	CONNECTOR	372-2426-010
J8	CONNECTOR	372 2426-010
J9	CONNECTOR	372-2426-010
J10	CONNECTOR	372 2426-010
J11	CONNECTOR	372-2426-010
J12	CONNECTOR	372 2426-010
J13	CONNECTOR	372-2426-010
J14	CONNECTOR	372 2426-010
J15	CONNECTOR	372-2426-010
J16	CONNECTOR	372 2426-010
J17	CONNECTOR	372-2426-010
J18	CONNECTOR	372 2426-010
J19	CONNECTOR	372-2426-010
J20	CONNECTOR	372 2426-010

D-2041 (9-65)

www.SteamPoweredRadio.com

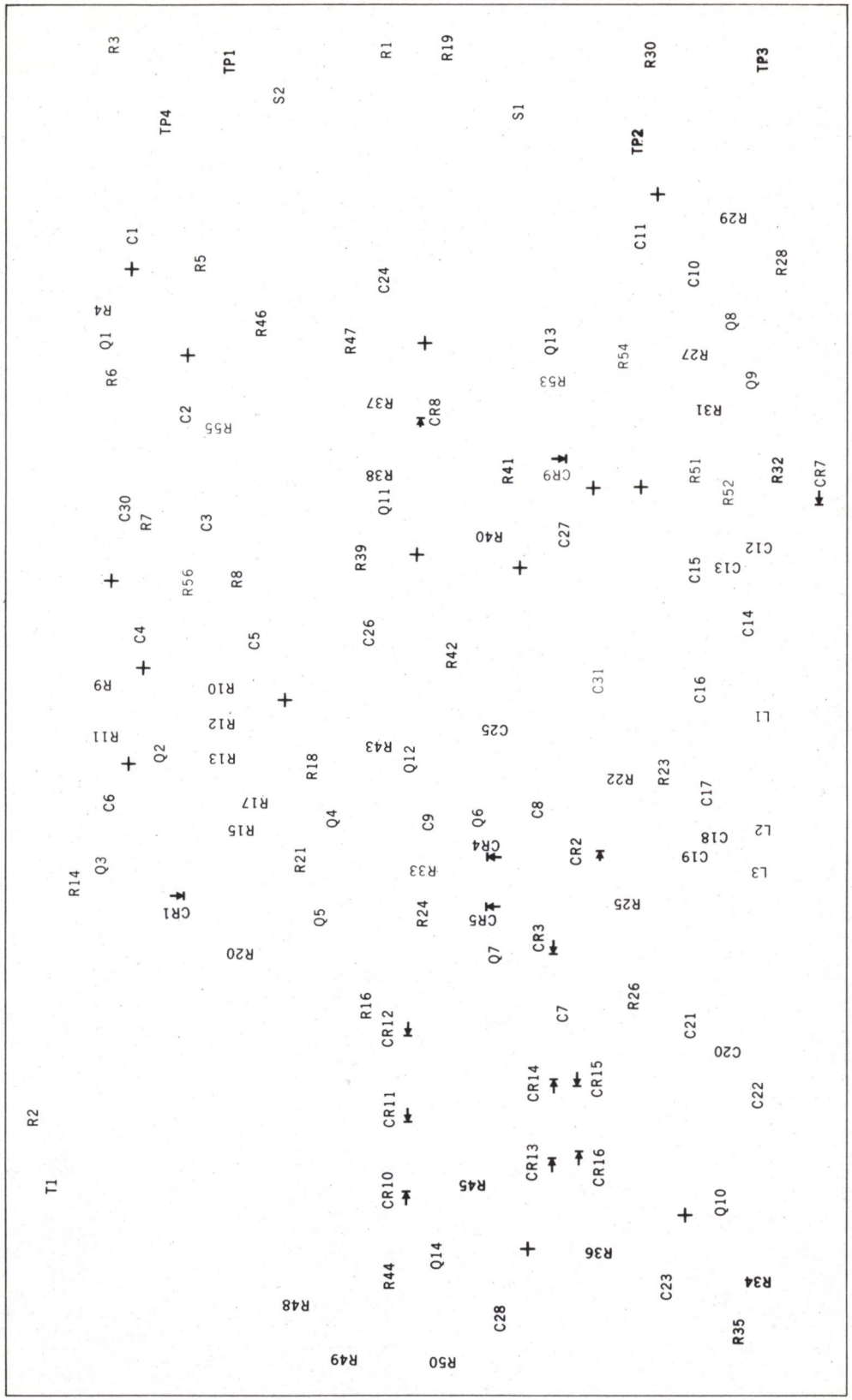

B700 3265 Rp

Figure 6-5. SCA Generator 786W-1 A1, A2.

www.SteamPoweredRadio.com

SYMBOL	DESCRIPTION			COLLINS PART NUMBER
	SCA GENERATOR 786W-1 A1,A2			772-5338-001
C1	CAPACITOR	6.8UF	35 V	184-6216-000
C2	CAPACITOR	6.8UF	35 V	184 6216-000
C3	CAPACITOR	0.022UF	50 V	933-0858-000
C4	CAPACITOR	6.8UF	35 V	184-6216-000
C5	CAPACITOR	250UF	40 V	183-2355-150
C6	CAPACITOR	6.8UF	35 V	184-6216-000
C7	CAPACITOR	3900PF	500 V	912-3046-000
C8	CAPACITOR	3900PF	500 V	912 3046-000
C9	CAPACITOR	6.8UF	35 V	184-6216-000
C10	CAPACITOR	2PF	500 V	916-0076-000
C11	CAPACITOR	6.8UF	35 V	184-6216-000
C12	CAPACITOR	500UUF	500 V	912-2977-000
C13	CAPACITOR	100PF	500 V	912-2816-000
C14	CAPACITOR	47PF	500 V	912-2792-000
C15	CAPACITOR	5PF	500 V	916-0118-000
C16	CAPACITOR	820PF	500 V	912-2995-000
C17	CAPACITOR	22PF	500 V	912-2768-000
C18	CAPACITOR	120PF	500 V	912-2822-000
C19	CAPACITOR	18PF	500 V	912-2763-000
C20	CAPACITOR	470PF	500 V	912-2974-000
C21	CAPACITOR	47PF	500 V	912-2792-000
C22	CAPACITOR	0.0075UF	75 V	184-9062-040
C23	CAPACITOR	0.033UF	100 V	184-6326-580
C24	CAPACITOR	22UF	50 V	184-6257-000
C25	CAPACITOR	250UF	40 V	183-2355-150
C26	CAPACITOR	47UF	35 V	184-6231-000
C27	CAPACITOR	5UF	50 V	183-1162-000
C28	CAPACITOR	6.8UF	35 V	184-6216-000
C29	NOT USED			
C30	CAPACITOR	15UF	35 V	184-6222-000
C31	CAPACITOR	220UF	25 V	183-2338-000
CR1	DIODE	1N914		353-2906-000
CR2	DIODE	1N995		353-2042-000
CR3	DIODE	1N995		353 2042-000
CR4	DIODE	1N995		353-2042-000
CR5	DIODE	1N995		353 2042-000
CR6	NOT USED			
CR7	DIODE	1N995		353-2042-000
CR8	DIODE	1N914		353-2906-000
CR9	DIODE	1N758		353-2723-000
CR10	DIODE	1N914		353-2906-000
CR11	DIODE	1N756A		353-2983-000
CR12	DIODE	1N756A		353 2983-000
CR13	DIODE	1N914		353-2906-000
CR14	DIODE	1N914		353 2906-000
CR15	DIODE	1N914		353-2906-000
CR16	DIODE	1N754A		353-2981-000
E1	TERMINAL			306-2222-100
E2	TERMINAL			306 2222-100
E3	TERMINAL			306-2222-100
L1	INDUCTOR	5000UH		240-0843-000
L2	INDUCTOR	1000UH		240-0839-000
L3	INDUCTOR	5000UH		240-0843-000
Q1	TRANSISTOR	2N3569		352-0629-030
Q2	TRANSISTOR	2N3565		352-0638-010
Q3	TRANSISTOR	2N718A		352-0318-000
Q4	TRANSISTOR	2N3638A		352-0636-020
Q5	TRANSISTOR	2N3638A		352 0636-020
Q6	TRANSISTOR	2N3563		352-0630-010
Q7	TRANSISTOR	2N3563		352 0630-010
Q8	TRANSISTOR	2N3563		352-0630-010
Q9	TRANSISTOR	2N3646		352-0680-010
Q10	TRANSISTOR	2N3565		352-0638-010
Q11	TRANSISTOR	2N3643		352-0713-030
Q12	TRANSISTOR	2N3643		352 0713-030
Q13	TRANSISTOR	2N3643		352-0713-030

D-2041 (9-65)

www.SteamPoweredRadio.com

SYMBOL	DESCRIPTION			COLLINS PART NUMBER
Q14	TRANSISTOR	2N3643		352 0713-030
R1	RESISTOR	50 K	3/4 W	382-0012-130
R2	RESISTOR	4700	1/4 W	745-0773-000
R3	RESISTOR	5 K	3/4 W	382-0012-090
R4	RESISTOR	39 K	1/4 W	745-0806-000
R5	RESISTOR	56 K	1/4 W	745-0812-000
R6	RESISTOR	1 K	1/4 W	745-0749-000
R7	RESISTOR	6800	1/4 W	745-0779-000
R8	RESISTOR	820	1/4 W	745-0746-000
R9	RESISTOR	39 K	1/4 W	745-0806-000
R10	RESISTOR	4700	1/4 W	745-0773-000
R11	RESISTOR	3900	1/4 W	745-0770-000
R12	RESISTOR	390	1/4 W	745-0734-000
R13	RESISTOR	270	1/4 W	745-0728-000
R14	RESISTOR	7500	1/2 W	705-7138-000
R15	RESISTOR	6190	1/2 W	705-7134-000
R16	RESISTOR	1780	1/2 W	705-7108-000
R17	RESISTOR	2.15 K	1/2 W	705-7112-000
R18	RESISTOR	33 K	1/4 W	745-0803-000
R19	RESISTOR	5 K	3/4 W	382-0012-090
R20	RESISTOR	2.15 K	1/2 W	705-7112-000
R21	RESISTOR	33 K	1/4 W	745-0803-000
R22	RESISTOR	10 K	1/4 W	745-0785-000
R23	RESISTOR	1 K	1/4 W	745-0749-000
R24	RESISTOR	1.96 K	1/4 W	705-6610-000
R25	RESISTOR	1 K	1/4 W	745-0749-000
R26	RESISTOR	10 K	1/4 W	745-0785-000
R27	RESISTOR	27 K	1/4 W	745-0800-000
R28	RESISTOR	10 K	1/4 W	745-0785-000
R29	RESISTOR	470	1/4 W	745-0737-000
R30	RESISTOR	50 K	3/4 W	382-0012-130
R31	RESISTOR	3300	1/4 W	745-0767-000
R32	RESISTOR	1800	1/4 W	745-0758-000
R33	RESISTOR	1.62 K	1/4 W	705-6606-000
R34	RESISTOR	3900	1/4 W	745-0770-000
R35	RESISTOR	8200	1/4 W	745-0782-000
R36	RESISTOR	820	1/4 W	745-0746-000
R37	RESISTOR	10 K	1/4 W	745-0785-000
R38	RESISTOR	220 K	1/4 W	745-0833-000
R39	RESISTOR	2700	1/4 W	745-0764-000
R40	RESISTOR	68	1/4 W	745-0707-000
R41	RESISTOR	33	1/4 W	745-0695-000
R42	RESISTOR	10 K	1/4 W	745-0785-000
R43	RESISTOR	61.9 K	1/4 W	705-6682-000
R44	RESISTOR	180	1/4 W	745-0722-000
R45	RESISTOR	180	1/2 W	745-1321-000
R46	RESISTOR	82.5 K	1/4 W	705-6688-000
R47	RESISTOR	26.1	1/4 W	705-6664-000
R48	RESISTOR	5110	1/2 W	705-7130-000
R49	RESISTOR	5110	1/2 W	705 7130-000
R50	RESISTOR	1330	1/2 W	705-7102-000
R51	RESISTOR	1800	1/4 W	745-0758-000
R52	RESISTOR	3900	1/4 W	745-0770-000
R53	SELECT R53 FROM THE FOLLOWING LIST			
	RESISTOR	100 K	1/4 W	705-6692-000
	RESISTOR	121 K	1/4 W	705-6696-000
	RESISTOR	147 K	1/4 W	705-6700-000
	RESISTOR	178 K	1/4 W	705-6704-000
	RESISTOR	215 K	1/4 W	705-6708-000
	RESISTOR	274 K	1/4 W	705-6713-000
	RESISTOR	348 K	1/4 W	705-6718-000
	RESISTOR	422 K	1/4 W	705-6722-000
	RESISTOR	511 K	1/4 W	705-6726-000
	RESISTOR	619 K	1/4 W	705-6730-000
	RESISTOR	750 K	1/4 W	705-6734-000
R54	RESISTOR	6800	1/4 W	745-0779-000
R55	RESISTOR	3300	1/4 W	745-0767-000
R56	RESISTOR	10 K	1/4 W	745-0785-000

D 2041 (9-65)

www.SteamPoweredRadio.com

SYMBOL	DESCRIPTION	COLLINS PART NUMBER
S1	SWITCH, TOGGLE	266-5321-980
S2	SWITCH, TOGGLE	266 5321-980
T1	TRANSFORMER, AF	667-0187-020
TP1	JACK, TIP	360-0434-100
TP2	JACK, TIP	360 0434-100
TP3	JACK, TIP	360-0434-100
TP4	JACK, TIP	360-0434-010

D-2041 (9-65)

www.SteamPoweredRadio.com

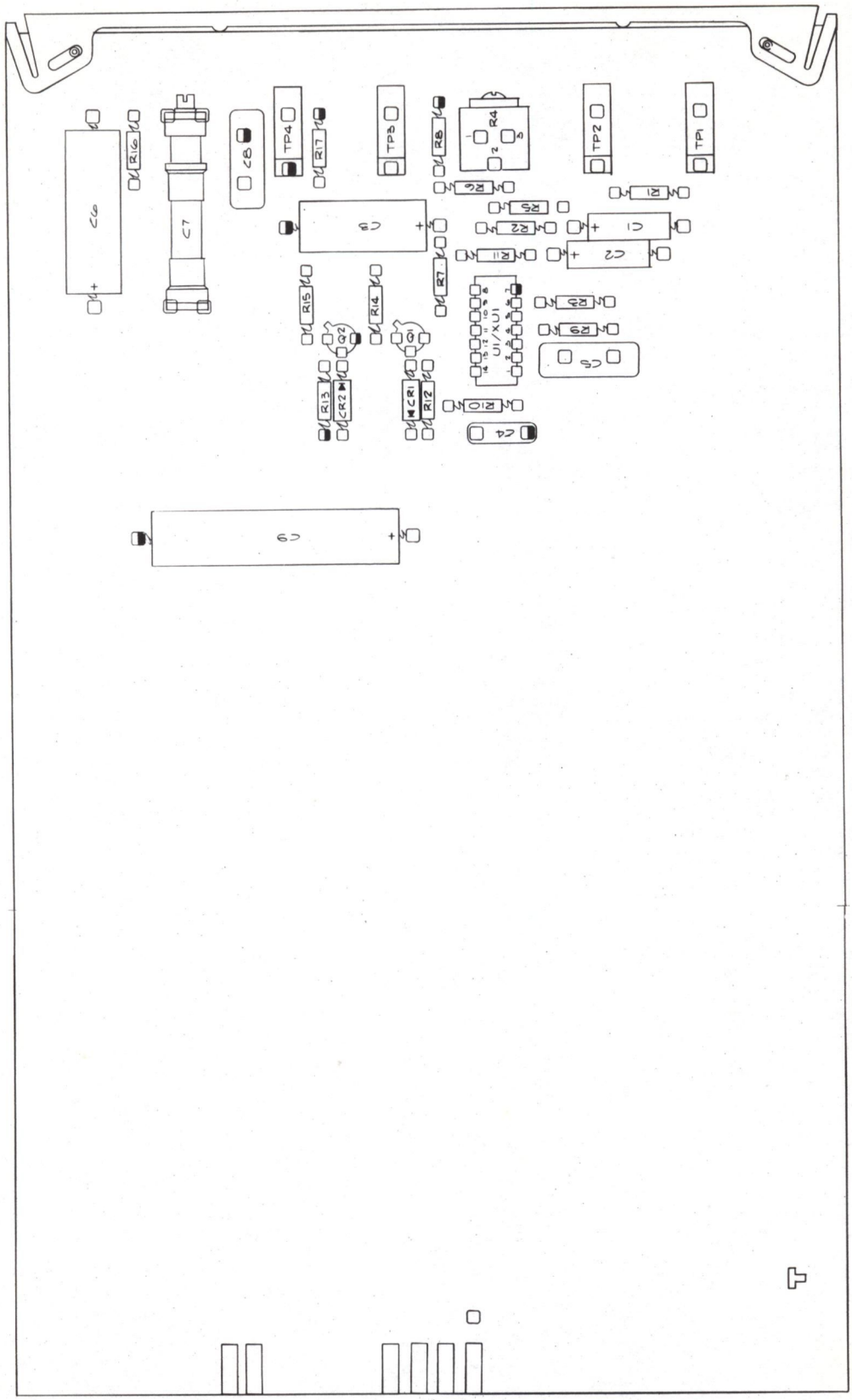

Figure 6-6. STL Interface 785E-1 A3.

www.SteamPoweredRadio.com

SYMBOL	DESCRIPTION			COLLINS PART NUMBER
	STL INTERFACE 785E-1 A3			622-2374-001
C1	CAPACITOR	22UF	15 V	184-9086-320
C2	CAPACITOR	22UF	15 V	184 9086-320
C3	CAPACITOR	100UF	20 V	184-9086-620
C4	CAPACITOR	1UF	50 V	913-3279-590
C5	CAPACITOR	1000PF	500 V	912-3001-000
C6	CAPACITOR	180UF	25 V	184-8664-000
C7	CAPACITOR, VARIABLE	1-60PF	1000V	922-0609-000
C8	CAPACITOR	510PF	500 V	912-2980-000
C9	CAPACITOR	100UF	50 V	183-1281-080
CR1	DIODE	1N914		353-2906-000
CR2	DIODE	1N914		353 2906-000
Q1	TRANSISTOR	2N2222A		352-0661-023
Q2	TRANSISTOR	2N2907A		352-0551-013
R1	RESISTOR	4.7 K	1/4 W	745-0773-000
R2	RESISTOR	47 K	1/4 W	745-0809-000
R3	RESISTOR	47 K	1/4 W	745 0809-000
R4	RESISTOR, VARIABLE	10 K		376-0254-070
R5	RESISTOR	10 K	1/4 W	745-0785-000
R6	RESISTOR	100 K	1/4 W	745-0821-000
R7	RESISTOR	8.2 K	1/4 W	745-0782-000
R8	RESISTOR	10 K	1/4 W	745-0785-000
R9	RESISTOR	100	1/4 W	745-0713-000
R10	RESISTOR	100	1/4 W	745 0713-000
R11	RESISTOR	100 K	1/4 W	745-0821-000
R12	RESISTOR	10 K	1/4 W	745-0785-000
R13	RESISTOR	10 K	1/4 W	745 0785-000
R14	RESISTOR	10	1/4 W	745-0677-000
R15	RESISTOR	10	1/4 W	745 0677-000
R16	RESISTOR	4.7 K	1/4 W	745-0773-000
R17	RESISTOR	270	1/4 W	745-0728-000
TP1	JACK, TIP			360-0434-040
TP2	JACK, TIP			360-0434-020
TP3	JACK, TIP			360-0434-030
TP4	JACK, TIP			360-0434-010
U1	INTEGRATED CIRCUIT	UA739		351-1175-010
XU1	SOCKET			220-0001-010

D-2041 (9-65)

www.SteamPoweredRadio.com

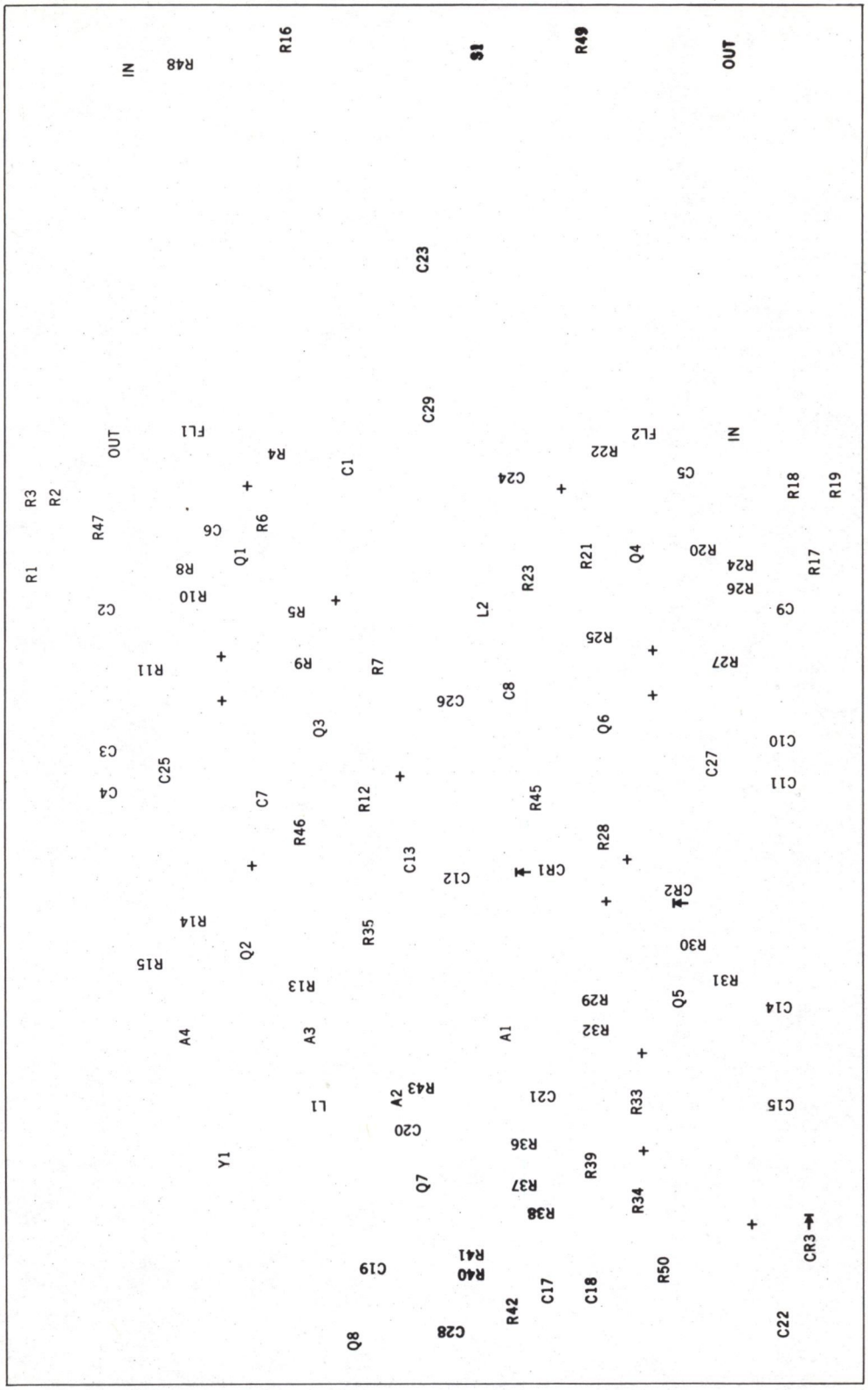

B700 3266 Rp

Figure 6-7. Stereo Generator 786V-1 A3.

If You Didn't Get This From My Site,
Then It Was Stolen From....
www.SteamPoweredRadio.com

SYMBOL	DESCRIPTION			COLLINS PART NUMBER
	STEREO GENERATOR 786V-1 A3			783-6648-001
A1	INTEGRATED CIRCUIT	ML923		351-7121-010
A2	INTEGRATED CIRCUIT	ML900		351-7121-030
A3	INTEGRATED CIRCUIT	ML900		351 7121-030
A4	INTEGRATED CIRCUIT	ML923		351-7121-010
C1	CAPACITOR	47 UF	35 V	184-6231-000
C2	CAPACITOR	47 UF	35 V	184 6231-000
C3	CAPACITOR	47 UF	35 V	184-6231-000
C4	CAPACITOR	1000 UF	16 V	183-2355-090
C5	CAPACITOR	47 UF	35 V	184-6231-000
C6	CAPACITOR	47 UF	35 V	184 6231-000
C7	CAPACITOR	1000 PF	500 V	912-3001-000
C8	CAPACITOR	1000 PF	500 V	912 3001-000
C9	CAPACITOR	47 UF	35 V	184-6231-000
C10	CAPACITOR	47 UF	35 V	184 6231-000
C11	CAPACITOR	1000 UF	16 V	183-2355-090
C12	CAPACITOR	250 UF	40 V	183-2355-150
C13	CAPACITOR	22 UF	35 V	184-6225-000
C14	CAPACITOR	250 UF	40 V	183-2355-150
C15	CAPACITOR	250 UF	40 V	183 2355-150
C16	NOT USED			
C17	CAPACITOR	2.2 UF	25 V	913-3812-000
C18	CAPACITOR	2.2 UF	25 V	913 3812-000
C19	CAPACITOR	33 PF	500 V	912-2780-000
C20	CAPACITOR	820 PF	500 V	912-2995-000
C21	CAPACITOR	3300 PF	500 V	912-3040-000
C22	CAPACITOR	47 UF	35 V	184-6231-000
C23	CAPACITOR	30,000 PF	500 V	912-3131-000
C24	CAPACITOR	3900 PF	500 V	912-3044-000
C25	CAPACITOR	2.2 UF	25 V	913-3812-000
C26	CAPACITOR	33 PF	500 V	912-2780-000
C27	CAPACITOR	2.2 UF	25 V	913-3812-000
C28	CAPACITOR	47 PF	500 V	912-2792-000
C29	CAPACITOR	1800 PF	500 V	912-3018-000
CR1	DIODE	1N914		353-2906-000
CR2	DIODE	1N914		353 2906-000
CR3	DIODE	1N747A		353-2702-000
FL1	FILTER, LOW PASS	15 KHZ		673-1167-010
FL2	FILTER, LOW PASS	15 KHZ		673 1167-010
L1	CHOKE, RF	6800 UH		240-2560-000
L2	COIL, RF	2 MH		240-0882-010
Q1	TRANSISTOR	2N3643		352-0713-030
Q2	TRANSISTOR	2N3643		352 0713-030
Q3	TRANSISTOR	2N3153		352-0776-010
Q4	TRANSISTOR	2N3643		352-0713-030
Q5	TRANSISTOR	2N3643		352 0713-030
Q6	TRANSISTOR	2N3153		352-0776-010
Q7	TRANSISTOR	2N3643		352-0713-030
Q8	TRANSISTOR	2N3643		352 0713-030
R1	RESISTOR	226	1/8 W	705-0965-000
R2	RESISTOR	226	1/8 W	705 0965-000
R3	RESISTOR	681	1/8 W	705-0988-000
R4	RESISTOR	649	1/8 W	705-0987-000
R5	RESISTOR	22 K	1/4 W	745-0797-000
R6	RESISTOR	100	1/8 W	705-0948-000
R7	RESISTOR	22 K	1/4 W	745-0797-000
R8	RESISTOR	3300	1/4 W	745-0767-000
R9	RESISTOR	10 K	1/8 W	705-1044-000
R10	RESISTOR	464	1/8 W	705-0980-000
R11	RESISTOR	61.9	1/8 W	705-0938-000
R12	RESISTOR	1 K	1/2 W	382-0008-070
R13	RESISTOR	120 K	1/4 W	745-0824-000
R14	RESISTOR	21.5 K	1/8 W	705-1060-000
R15	RESISTOR	348	1/8 W	705-0974-000
R16	RESISTOR	20 K	1/2 W	382-0008-450
R17	RESISTOR	226	1/8 W	705-0965-000
R18	RESISTOR	226	1/8 W	705 0965-000

D-2041 (9-65)

www.SteamPoweredRadio.com

SYMBOL	DESCRIPTION			COLLINS PART NUMBER
R19	RESISTOR	681	1/8 W	705-0988-000
R20	RESISTOR	649	1/8 W	705-0987-000
R21	RESISTOR	22 K	1/4 W	745-0797-000
R22	RESISTOR	100	1/8 W	705-0948-000
R23	RESISTOR	22 K	1/4 W	745-0797-000
R24	RESISTOR	3300	1/4 W	745-0767-000
R25	RESISTOR	10 K	1/8 W	705-1044-000
R26	RESISTOR	464	1/8 W	705-0980-000
R27	RESISTOR	61.9	1/8 W	705-0938-000
R28	RESISTOR	1 K	1/2 W	382-0008-070
R29	RESISTOR	120 K	1/4 W	745-0824-000
R30	RESISTOR	21.5 K	1/8 W	705-1060-000
R31	RESISTOR	348	1/8 W	705-0974-000
R32	RESISTOR	619	1/4 W	705-6586-000
R33	RESISTOR	560	1/4 W	745-0740-000
R34	RESISTOR	56	1/4 W	745-0704-000
R35	RESISTOR	470	1/4 W	745-0737-000
R36	RESISTOR	10 K	1/4 W	745-0785-000
R37	RESISTOR	68 K	1/4 W	745-0815-000
R38	RESISTOR	100	1/4 W	745-0713-000
R39	RESISTOR	820	1/4 W	745-0746-000
R40	RESISTOR	100 K	1/4 W	745-0821-000
R41	RESISTOR	3900	1/4 W	745-0770-000
R42	RESISTOR	470	1/4 W	745-0737-000
R43	RESISTOR	680	1/4 W	745-0743-000
R44	NOT USED			
R45	RESISTOR	147	1/8 W	705-0956-000
R46	RESISTOR	147	1/8 W	705 0956-000
R47	RESISTOR	470	1/4 W	745-0737-000
R48	RESISTOR	330	1/4 W	745-0731-000
R49	RESISTOR	50	1/2 W	382-0008-370
R50	RESISTOR	180	2 W	745-5621-000
S1	SWITCH, TOGGLE			266-5059-000
XY1	SOCKET, CRYSTAL			292-0215-000
Y1	CRYSTAL UNIT, QUARTZ			289-7095-020

D-2041 (9-65)

www.SteamPoweredRadio.com

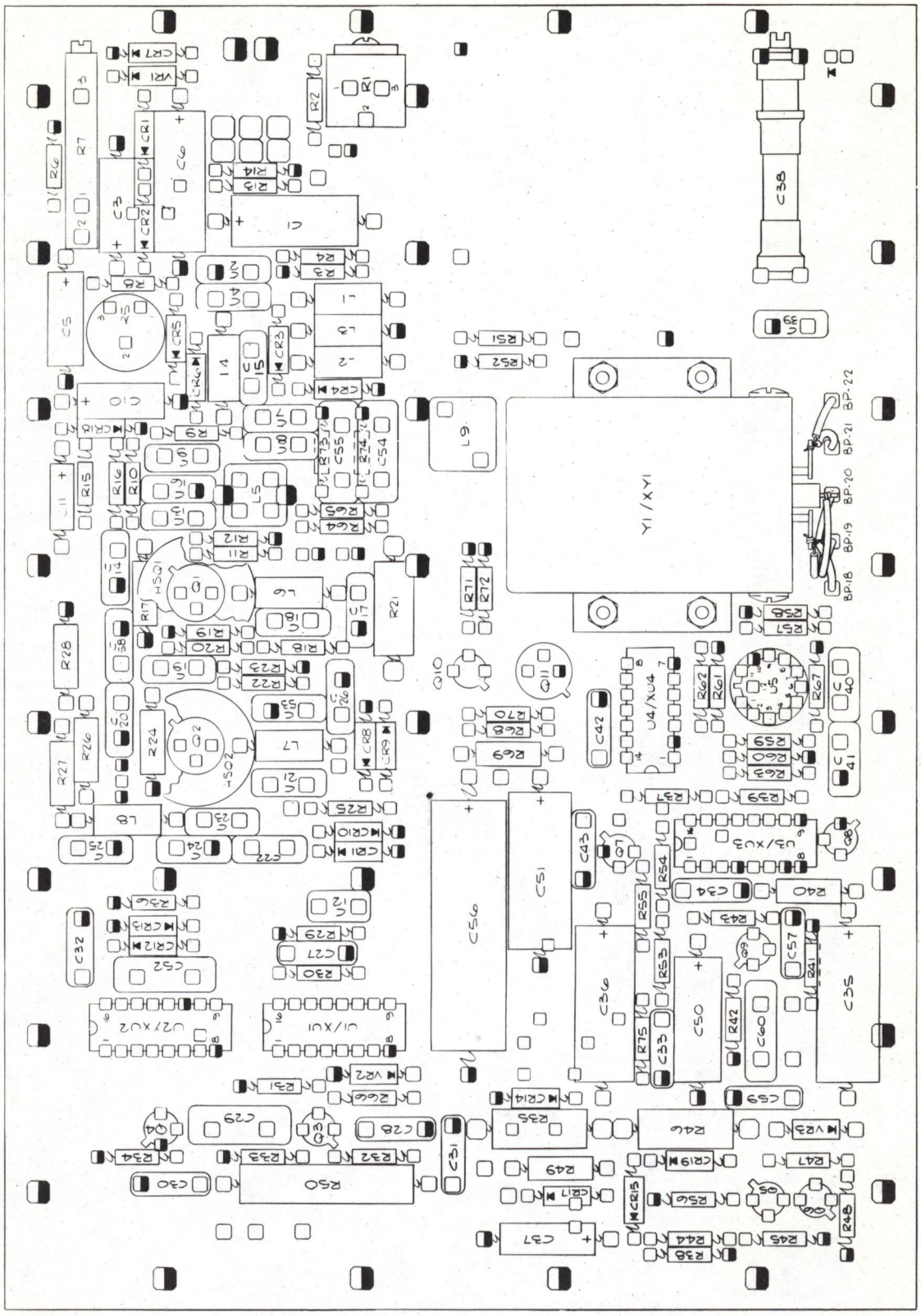

Figure 6-8. Modulator/Exciter A4 (Sheet 1 of 2).

www.SteamPoweredRadio.com

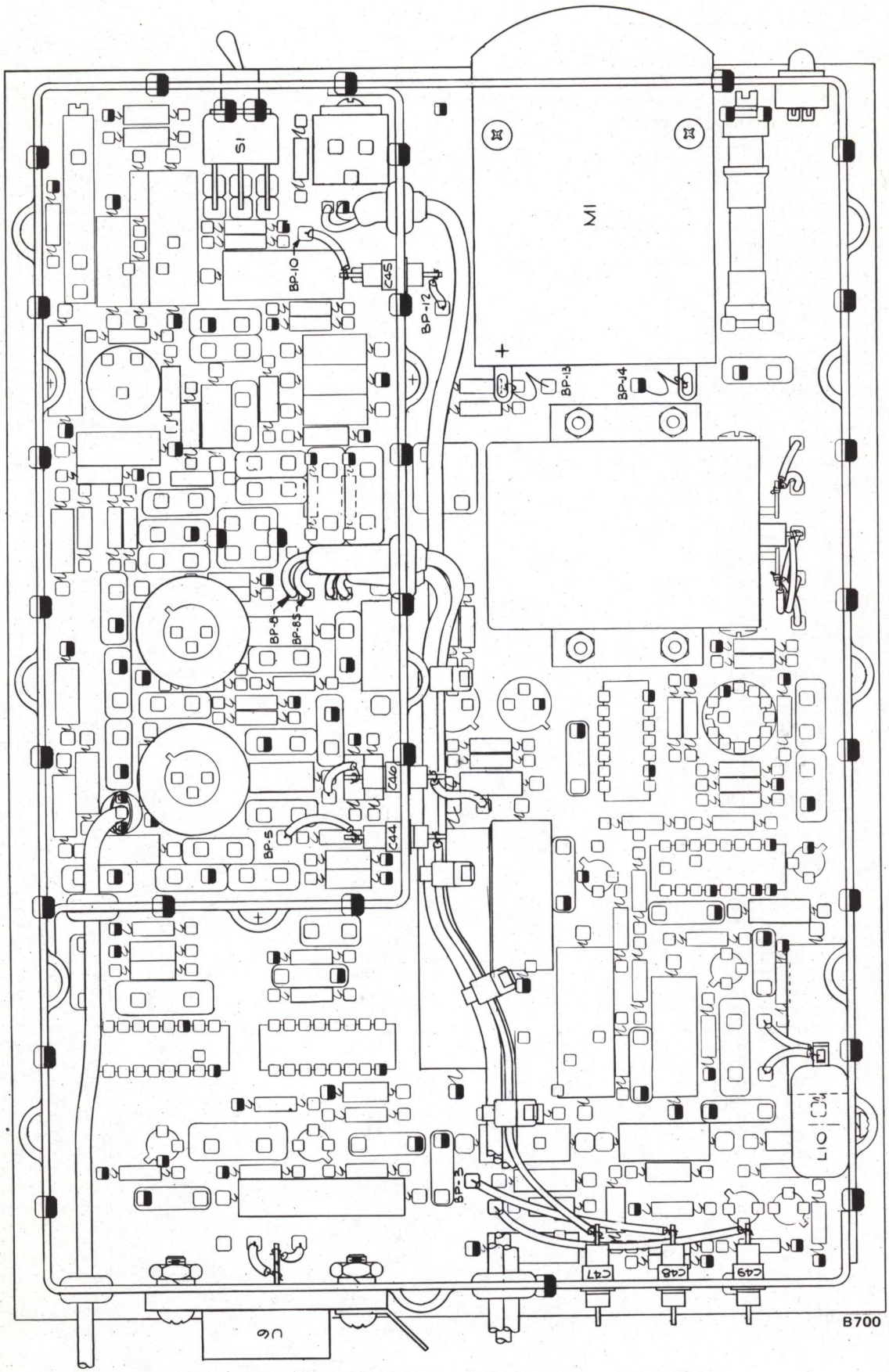

Figure 6-9. Modulator/Exciter A4 (Sheet 2 of 2).

www.SteamPoweredRadio.com

SYMBOL	DESCRIPTION			COLLINS PART NUMBER
	MODULATOR/EXCITER A4			627-6695-001
C1	CAPACITOR	100UF	25 V	184-9103-570
C2	CAPACITOR	100PF	500 V	912-2816-000
C3	CAPACITOR	10UF	25 V	184-9103-530
C4	CAPACITOR	100PF	500 V	912-2816-000
C5	CAPACITOR	10UF	25 V	184-9103-530
C6	CAPACITOR	100UF	25 V	184-9103-570
C7	CAPACITOR	51PF	500 V	916-0476-000
C8	CAPACITOR	22PF	500 V	916-0432-000
C9	CAPACITOR	47PF	500 V	912-2792-000
C10	CAPACITOR	2.2UF	50 V	184-9087-500
C11	CAPACITOR	1UF	50 V	184-9087-440
C12	CAPACITOR	220PF	500 V	912-2840-000
C13	CAPACITOR	47PF	500 V	912-2792-000
C14	CAPACITOR	47PF	500 V	912 2792-000
C15	CAPACITOR	100PF	500 V	912-2816-000
C16	CAPACITOR	100PF	500 V	912 2816-000
C17	CAPACITOR	100PF	500 V	912-2816-000
C18	CAPACITOR	18PF	500 V	912-2762-000
C19	CAPACITOR	100PF	500 V	912-2816-000
C20	CAPACITOR	100PF	500 V	912 2816-000
C21	CAPACITOR	5PF	500 V	912-2751-000
C22	CAPACITOR	5PF	500 V	912 2751-000
C23	CAPACITOR	100PF	500 V	912-2816-000
C24	CAPACITOR	22PF	500 V	912-2768-000
C25	CAPACITOR	39PF	500 V	912-2786-000
C26	CAPACITOR	100PF	500 V	912-2816-000
C27	CAPACITOR	1UF	25 V	913-3810-000
C28	CAPACITOR	1UF	25 V	913 3810-000
C29	CAPACITOR	1000PF	500 V	912-3001-000
C30	CAPACITOR	0.1UF	25 V	912-3806-000
C31	CAPACITOR	0.1UF	200 V	913-3681-000
C32	CAPACITOR	1UF	25 V	913-3810-000
C33	CAPACITOR	0.1UF	25 V	912-3806-000
C34	CAPACITOR	0.1UF	25 V	912 3806-000
C35	CAPACITOR	180UF	25 V	184-8664-000
C36	CAPACITOR	180UF	25 V	184 8664-000
C37	CAPACITOR	10UF	25 V	184-9103-530
C38	CAPACITOR	1-60PF	1000V	922-0609-000
C39	CAPACITOR	18PF	500 V	912-2762-000
C40	CAPACITOR	180PF	500 V	912-2834-000
C41	CAPACITOR	180PF	500 V	912 2834-000
C42	CAPACITOR	1UF	25 V	913-3810-000
C43	CAPACITOR	1UF	25 V	913 3810-000
C44	CAPACITOR	1000PF	500 V	913-3208-000
C45	CAPACITOR	1000PF	500 V	913 3208-000
C46	CAPACITOR	1000PF	500 V	913-3208-000
C47	CAPACITOR	1000PF	500 V	913 3208-000
C48	CAPACITOR	1000PF	500 V	913-3208-000
C49	CAPACITOR	1000PF	500 V	913 3208-000
C50	CAPACITOR	100UF	10 V	184-9086-610
C51	CAPACITOR	180UF	25 V	184-8664-000
C52	CAPACITOR	1000PF	500 V	912-3001-000
C53	CAPACITOR	100PF	500 V	912-2816-000
C54	CAPACITOR	510PF	500 V	912-2980-000
C55	CAPACITOR	510PF	500 V	912 2980-000
C56	CAPACITOR	100UF	50 V	183-1281-080
C57	CAPACITOR	0.1UF	25 V	912-3806-000
C58	CAPACITOR	100PF	500 V	912-2816-000
C59	CAPACITOR	0.1UF	25 V	912-3806-000
C60	CAPACITOR	560PF	500 V	912-2983-000
CR1	DIODE	1N914		353-2906-000
CR2	DIODE	1N914		353 2906-000
CR3	DIODE	MV1404		922-6100-020
CR4	DIODE	MV1404		922 6100-020
CR5	DIODE	MV1650		922-6109-020
CR6	DIODE	MV1650		922 6109-020

D-2041 (9-65)

www.SteamPoweredRadio.com

SYMBOL	DESCRIPTION			COLLINS PART NUMBER
CR7	DIODE	1N914		353-2906-000
CR8	DIODE	1N914		353 2906-000
CR9	DIODE	1N914		353-2906-000
CR10	DIODE	1N914		353 2906-000
CR11	DIODE	1N914		353-2906-000
CR12	DIODE	1N914		353 2906-000
CR13	DIODE	1N914		353-2906-000
CR14	DIODE	1N914		353 2906-000
CR15	DIODE	1N914		353-2906-000
CR16	DIODE			353-3725-060
CR17	DIODE	1N914		353-2906-000
CR18	DIODE	1N5159		353-6549-020
CR19	DIODE	1N914		353-2906-000
HSQ1	HEATSINK			352-2619-030
HSQ2	HEATSINK			352 2619-030
L1	INDUCTOR	1.5 UHY		240-2715-150
L2	INDUCTOR	1.5 UHY		240 2715-150
L3	INDUCTOR	1.5 UHY		240-2715-150
L4	INDUCTOR	1.5 UHY		240 2715-150
L5	INDUCTOR, VARIABLE	0.13 UHY		242-0424-050
L6	INDUCTOR	0.47 UHY		240-2715-090
L7	INDUCTOR	1.5 UHY		240-2715-150
L8	INDUCTOR	0.1 UHY		240-2715-010
L9	INDUCTOR	10 HY		678-0205-010
L10	INDUCTOR	150 MHY		240-0276-000
M1	METER	0-50 UA		458-0908-020
P1	CONNECTOR BOARD			627-9766-001
P2	CONNECTOR			357-9210-000
Q1	TRANSISTOR	2N5109		352-0766-010
Q2	TRANSISTOR	2N5109		352 0766-010
Q3	TRANSISTOR	2N2907A		352-0551-013
Q4	TRANSISTOR	2N2222A		352-0661-023
Q5	TRANSISTOR	2N2222A		352 0661-023
Q6	TRANSISTOR	2N2222A		352-0661-023
Q7	TRANSISTOR	2N2222A		352 0661-023
Q8	TRANSISTOR	2N2222A		352-0661-023
Q9	TRANSISTOR	2N2222A		352 0661-023
Q10	TRANSISTOR	2N2222A		352-0661-023
Q11	TRANSISTOR	2N3053		352-0613-010
R1	RESISTOR, VARIABLE	500		376-0254-030
R2	RESISTOR	100	1/4 W	745-0713-000
R3	RESISTOR	22 K	1/4 W	745-0797-000
R4	RESISTOR	47 K	1/4 W	745-0809-000
R5	RESISTOR, VARIABLE	25 K		380-3761-080
R6	RESISTOR	22 K	1/4 W	745-0797-000
R7	RESISTOR, VARIABLE	10 K	3/4 W	381-1802-000
R8	RESISTOR	22 K	1/4 W	745-0797-000
R9	RESISTOR	22 K	1/4 W	745 0797-000
R10	RESISTOR	10 K	1/4 W	745-0785-000
R11	RESISTOR	4.7 K	1/4 W	745-0773-000
R12	RESISTOR	1 K	1/4 W	745-0749-000
R13	RESISTOR	10 K	1/4 W	745-0785-000
R14	RESISTOR	8.2 K	1/4 W	745-0782-000
R15	RESISTOR	47 K	1/4 W	745-0809-000
R16	RESISTOR	470 K	1/4 W	745-0845-000
R17	RESISTOR	100	1/2 W	745-1310-000
R18	RESISTOR	15	1/4 W	745-0683-000
R19	RESISTOR	68	1/4 W	745-0707-000
R20	RESISTOR	15	1/4 W	745-0683-000
R21	RESISTOR	150	1 W	745-3317-000
R22	RESISTOR	3.3 K	1/4 W	745-0767-000
R23	RESISTOR	470	1/4 W	745-0737-000
R24	RESISTOR	47	1/2 W	745-1296-000
R25	RESISTOR	4.7 K	1/4 W	745-0773-000
R26	RESISTOR	22	1/2 W	745-1282-000
R27	RESISTOR	22	1/2 W	745 1282-000
R28	RESISTOR	47	1/2 W	745-1296-000
R29	RESISTOR	3.9 K	1/4 W	745-0770-000
R30	RESISTOR	1.2 K	1/4 W	745-0752-000

D-2041 (9-65)

www.SteamPoweredRadio.com

SYMBOL	DESCRIPTION			COLLINS PART NUMBER
R31	RESISTOR	470	1/4 W	745-0737-000
R32	RESISTOR	100	1/4 W	745-0713-000
R33	RESISTOR	270	1/4 W	745-0728-000
R34	RESISTOR	1 K	1/4 W	745-0749-000
R35	RESISTOR	220	1 W	745-3324-000
R36	RESISTOR	10 K	1/4 W	745-0785-000
R37	RESISTOR	10 K	1/4 W	745 0785-000
R38	RESISTOR	1 K	1/4 W	745-0749-000
R39	RESISTOR	10 K	1/4 W	745-0785-000
R40	RESISTOR	2.2 K	1/2 W	745-1366-000
R41	RESISTOR	2.2 K	1/4 W	745-0761-000
R42	RESISTOR	470	1/4 W	745-0737-000
R43	RESISTOR	4.7 K	1/4 W	745-0773-000
R44	RESISTOR	1 K	1/4 W	745-0749-000
R45	RESISTOR	2.7 K	1/4 W	745-0764-000
R46	RESISTOR	1 K	1 W	745-3352-000
R47	RESISTOR	4.7K	1/4 W	745-0773-000
R48	RESISTOR	1 K	1/4 W	745-0749-000
R49	RESISTOR	2.7 K	1/2 W	745-1370-000
R50	RESISTOR	39	2 W	745-5593-000
R51	RESISTOR	100 K	1/4 W	745-0821-000
R52	RESISTOR	1 K	1/4 W	745-0749-000
R53	RESISTOR	10 K	1/4 W	745-0785-000
R54	RESISTOR	10 K	1/4 W	745 0785-000
R55	RESISTOR	4.7 K	1/4 W	745-0773-000
R56	RESISTOR	15	1/4 W	745-0683-000
R57	RESISTOR	10 K	1/4 W	745-0785-000
R58	RESISTOR	10 K	1/4 W	745 0785-000
R59	RESISTOR	270	1/4 W	745-0728-000
R60	RESISTOR	470	1/4 W	745-0737-000
R61	RESISTOR	470	1/4 W	745 0737-000
R62	RESISTOR	1 K	1/4 W	745-0749-000
R63	RESISTOR	1 K	1/4 W	745 0749-000
R64	RESISTOR	27 K	1/4 W	745-0800-000
R65	RESISTOR	27 K	1/4 W	745 0800-000
R66	RESISTOR	1 K	1/4 W	745-0749-000
R67	RESISTOR	100	1/4 W	745-0713-000
R68	RESISTOR	15 K	1/4 W	745-0791-000
R69	RESISTOR	1.2 K	1/2 W	745-1356-000
R70	RESISTOR	15 K	1/4 W	745-0791-000
R71	RESISTOR	2.2 K	1/4 W	745-0761-000
R72	RESISTOR	4.7 K	1/4 W	745-0773-000
R73	RESISTOR	2.2 K	1/4 W	745-0761-000
R74	RESISTOR	2.2 K	1/4 W	745 0761-000
R75	RESISTOR	15 K	1/4 W	745-0791-000
S1	SWITCH			266-5321-990
U1	INTEGRATED CIRCUIT	MC10178		351-1520-020
U2	INTEGRATED CIRCUIT	CD4020		351-8159-090
U3	INTEGRATED CIRCUIT	CD4027		351-8159-180
U4	INTEGRATED CIRCUIT	CD4024		351-8159-100
U5	INTEGRATED CIRCUIT	CA3018		351-1016-010
U6	INTEGRATED CIRCUIT	7805KC		351-1120-080
VR1	ZENER DIODE	1N4744A		353-6481-330
VR2	ZENER DIODE	1N4744A		353 6481-330
VR3	ZENER DIODE	1N4740A		353-6481-250
XCR16	RING, RETAINING			353-3725-060
XU1	SOCKET			220-0001-020
XU2	SOCKET			220 0001-020
XU3	SOCKET			220-0001-020
XU4	SOCKET			220-0001-010
XU5	INSULATOR DISC			352-9552-040
XY1	OVEN CRYSTAL			292-0328-010

D-2041 (9-65)

www.SteamPoweredRadio.com

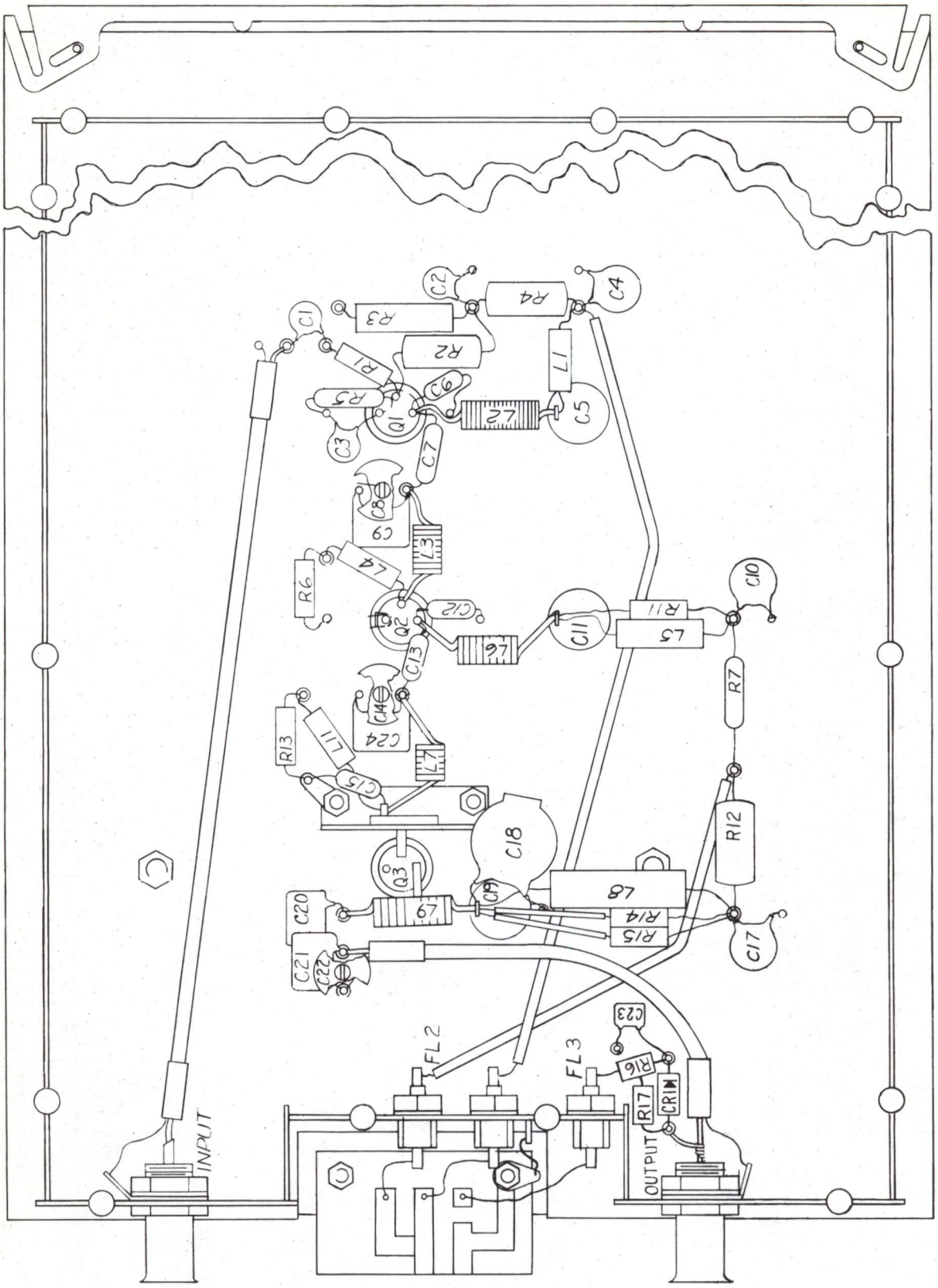

Figure 6-10. Power Amplifier A5.

If You Didn't Get This From My Site,
Then It Was Stolen From....
www.SteamPoweredRadio.com

SYMBOL	DESCRIPTION			COLLINS PART NUMBER
	POWER AMPLIFIER A5			769-0830-001
C1	CAPACITOR	680PF	1000V	913-1194-000
C2	CAPACITOR	470PF	500 V	913-1189-000
C3	CAPACITOR	470PF	500 V	913 1189-000
C4	CAPACITOR	0.01UF	100 V	913-3680-000
C5	CAPACITOR	1000PF	500 V	912-4115-330
C6	CAPACITOR	15PF	500 V	912-2759-000
C7	CAPACITOR	15PF	500 V	912 2759-000
C8	CAPACITOR	5.5-18PF	350 V	917-1222-000
C9	CAPACITOR	33PF	500 V	912-2781-000
C10	CAPACITOR	0.01UF	100 V	913-3680-000
C11	CAPACITOR	1000PF	500 V	912-4115-330
C12	CAPACITOR	10PF	500 V	912-2753-000
C13	CAPACITOR	18PF	500 V	912-2762-000
C14	CAPACITOR	5.5-18PF	350 V	917-1222-000
C15	CAPACITOR	82PF	500 V	912-2810-000
C16	CAPACITOR	500PF	500 V	912-0667-000
C17	CAPACITOR	0.01UF	100 V	913-3680-000
C18	CAPACITOR	0.1PF	200 V	913-3681-000
C19	CAPACITOR	1000PF	500 V	912-4115-330
C20	CAPACITOR	110PF	500 V	912-2819-000
C21	CAPACITOR	27PF	500 V	912-2774-000
C22	CAPACITOR	5.5-18PF	350 V	917-1222-000
C23	CAPACITOR	100PF	500 V	912-2816-000
C24	CAPACITOR	22PF	500 V	912-2769-000
CR1	DIODE	1N914		353-2906-000
FL1	FILTER, RI	1300PF	200 V	241-0332-000
FL2	FILTER, RI	1300PF	200 V	241 0332-000
FL3	FILTER, RI	1300PF	200 V	241-0332-000
J1	CONNECTOR	VG1051		357-9210-000
J2	CONNECTOR	VG1051		357 9210-000
L1	COIL, RF	1 UH		240-1590-000
L2	COIL	0.082 UH		776-1882-001
L3	COIL	0.048 UH		776-1910-001
L4	COIL, RF	0.15 UH		240-1585-000
L5	COIL, RF	2.2 UH		240-1654-000
L6	COIL	0.056 UH		776-1911-001
L7	COIL	0.05 UH		776-1912-001
L8	CHOKE, RF	1.2 UH		240-1605-000
L9	COIL	0.092 UH		776-1883-001
L11	COIL, RF	0.15 UH		240-1585-000
Q1	TRANSISTOR	2N3866		352-0671-010
Q2	TRANSISTOR	2N3375		352-0611-010
Q3	TRANSISTOR	2N5102		352-0747-010
R1	RESISTOR	39	1/2 W	745-1293-000
R2	RESISTOR	22	3 W	747-5327-000
R3	RESISTOR	23.7	1/2 W	705-7018-000
R4	RESISTOR	270	3 W	747-5349-000
R5	RESISTOR	10	1/4 W	705-6500-000
R6	RESISTOR	100	1/2 W	745-1310-000
R7	RESISTOR	2	1 W	747-4230-300
R11	RESISTOR	10	1/2 W	745-1268-000
R12	RESISTOR	0.5	2.5 W	746-9457-000
R13	RESISTOR	4.7	1/2 W	745-6279-000
R14	RESISTOR	10	1/2 W	745-1268-000
R15	RESISTOR	10	1/2 W	745 1268-000
R16	RESISTOR	1 K	1/4 W	745-0749-000
R17	RESISTOR	470	1/4 W	745-0737-000

D-2041 (9-65)

www.SteamPoweredRadio.com

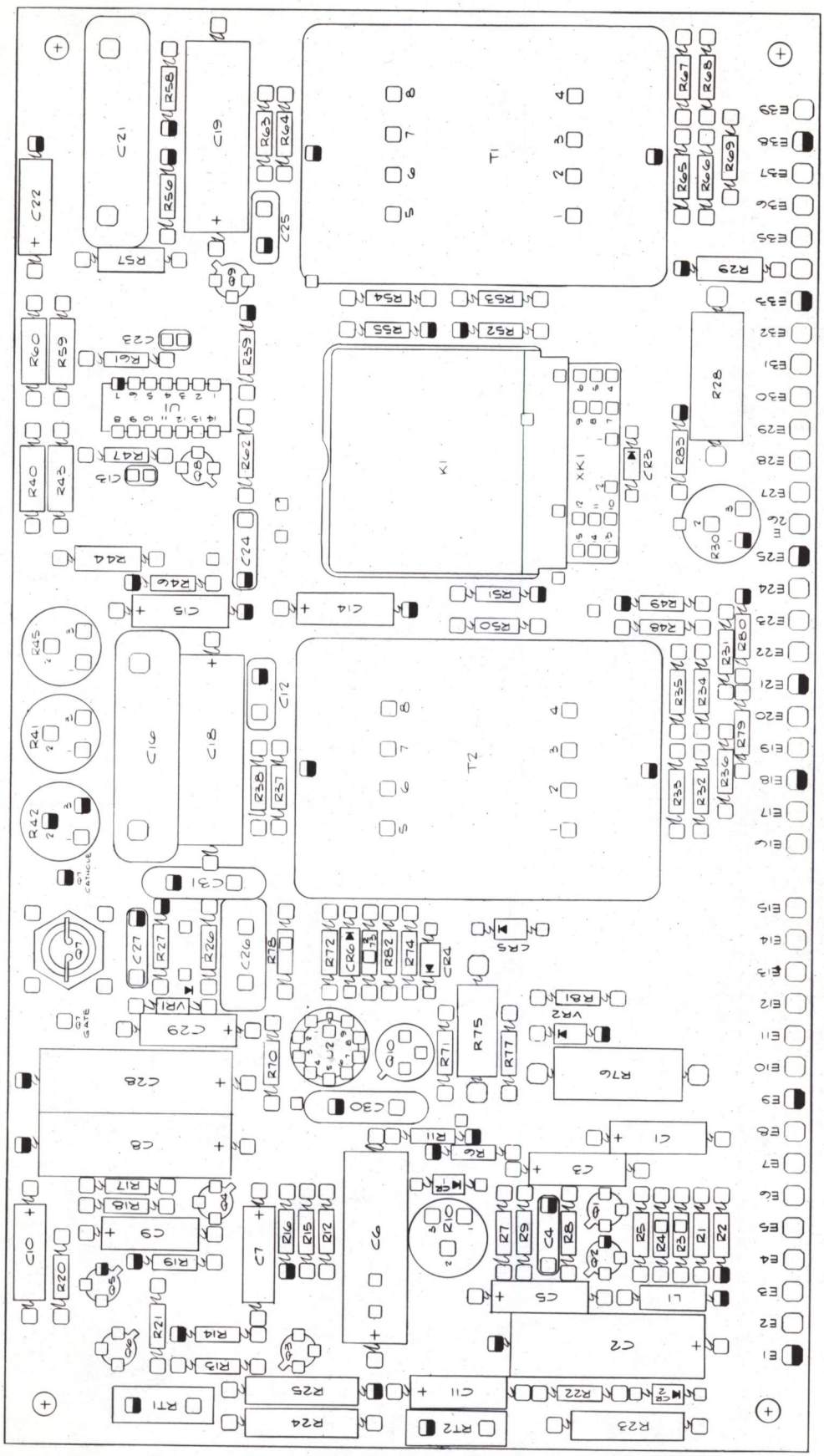

B700 3269 Rp

Figure 6-11. Audio/Mtr Regulator A6.

www.SteamPoweredRadio.com

SYMBOL	DESCRIPTION			COLLINS PART NUMBER
	AUDIO/MTR REGULATOR A6			627-9773-001
C1	CAPACITOR	22UF	15 V	184-9086-320
C2	CAPACITOR	180UF	25 V	184-8664-000
C3	CAPACITOR	22UF	15 V	184-9086-320
C4	CAPACITOR	0.1UF	25 V	913-3806-000
C5	CAPACITOR	10UF	20 V	184-9086-470
C6	CAPACITOR	150UF	30 V	184-8673-000
C7	CAPACITOR	22UF	15 V	184-9086-320
C8	CAPACITOR	180UF	25 V	184-8664-000
C9	CAPACITOR	22UF	15 V	184-9086-320
C10	CAPACITOR	22UF	15 V	184 9086-320
C11	CAPACITOR	10UF	20 V	184-9086-470
C12	CAPACITOR	100PF	500 V	912-2816-000
C13	CAPACITOR	0.01UF	50 V	913-3279-110
C14	CAPACITOR	22UF	15 V	184-9086-320
C15	CAPACITOR	22UF	15 V	184 9086-320
C16	CAPACITOR	0.030UF	500 V	912-3133-000
C17	NOT USED			
C18	CAPACITOR	180UF	25 V	184-8664-000
C19	CAPACITOR	180UF	25 V	184 8664-000
C20	NOT USED			
C21	CAPACITOR	0.030UF	500 V	912-3133-000
C22	CAPACITOR	22UF	15 V	184-9086-320
C23	CAPACITOR	0.01UF	50 V	913-3279-110
C24	CAPACITOR	1UF	25 V	913-3810-000
C25	CAPACITOR	100PF	500 V	912-2816-000
C26	CAPACITOR	2200PF	500 V	913-3025-000
C27	CAPACITOR	1UF	25 V	913-3810-000
C28	CAPACITOR	180UF	25 V	184-8664-000
C29	CAPACITOR	22UF	15 V	184-9086-320
C30	CAPACITOR	0.1UF	200 V	913-3681-000
C31	CAPACITOR	0.1UF	200 V	913 3681-000
CR1	DIODE	1N914		353-2906-000
CR2	DIODE	1N914		353 2906-000
CR3	DIODE	1N4003		353-6442-030
CR4	DIODE	1N914		353-2906-000
CR5	DIODE	1N914		353 2906-000
CR6	DIODE	1N914		353-2906-000
K1	RELAY			970-2420-040
L1	INDUCTOR	6.8 MHY		240-1578-000
Q1	TRANSISTOR	2N2907A		352-0551-013
Q2	TRANSISTOR	2N2907A		352 0551-013
Q3	TRANSISTOR	2N2907A		352-0551-013
Q4	TRANSISTOR	2N2907A		352 0551-013
Q5	TRANSISTOR	2N2907A		352-0551-013
Q6	TRANSISTOR	2N2907A		352 0551-013
Q7	TRANSISTOR, SCR	2N4168		353-6485-020
Q8	TRANSISTOR	2N2222A		352-0661-023
Q9	TRANSISTOR	2N2222A		352 0661-023
Q10	TRANSISTOR	2N3053		352-0613-010
R1	RESISTOR	8.2 K	1/4 W	745-0782-000
R2	RESISTOR	47 K	1/4 W	745-0809-000
R3	RESISTOR	1.2 K	1/4 W	745-0752-000
R4	RESISTOR	82	1/4 W	745-0710-000
R5	RESISTOR	5.6 K	1/4 W	745-0776-000
R6	RESISTOR	8.2 K	1/4 W	745-0782-000
R7	RESISTOR	5.6 K	1/4 W	745-0776-000
R8	RESISTOR	23.7 K	1/4 W	705-6662-000
R9	RESISTOR	1.2 K	1/4 W	745-0752-000
R10	RESISTOR, VARIABLE	100		380-3761-010
R11	RESISTOR	390 K	1/4 W	745-0842-000
R12	RESISTOR	5.6 K	1/4 W	745-0776-000
R13	RESISTOR	1.2 K	1/4 W	745-0752-000
R14	RESISTOR	5.6 K	1/4 W	745-0776-000
R15	RESISTOR	3.9 K	1/4 W	745-0770-000
R16	RESISTOR	12 K	1/4 W	745-0788-000
R17	RESISTOR	2.2 K	1/4 W	745-0761-000

D-2041 (9-65)

www.SteamPoweredRadio.com

SYMBOL	DESCRIPTION			COLLINS PART NUMBER
R18	RESISTOR	10 K	1/4 W	745-0785-000
R19	RESISTOR	5.6 K	1/4 W	745-0776-000
R20	RESISTOR	22 K	1/4 W	745-0797-000
R21	RESISTOR	390	1/4 W	745-0734-000
R22	RESISTOR	1.5 K	1/4 W	745-0755-000
R23	RESISTOR	12.1 K	1/4 W	705-6648-000
R24	RESISTOR	1.78 K	1/4 W	705-1418-250
R25	RESISTOR	511	1/4 W	705-1417-690
R26	RESISTOR	100	1/4 W	745-0713-000
R27	RESISTOR	220	1/4 W	745-0725-000
R28	RESISTOR	390	2 W	745-5635-000
R29	RESISTOR	100 K	1/4 W	745-0821-000
R30	RESISTOR, VARIABLE	1 K		380 3761-040
R31	RESISTOR	22 K	1/4 W	745-0797-000
R32	RESISTOR	274	1/8 W	705-0969-000
R33	RESISTOR	274	1/8 W	705 0969-000
R34	RESISTOR	274	1/8 W	705-0969-000
R35	RESISTOR	274	1/8 W	705 0969-000
R36	RESISTOR	154	1/8 W	705-0957-000
R37	RESISTOR	2.7 K	1/4 W	745-0764-000
R38	RESISTOR	10 K	1/8 W	705-1454-630
R39	RESISTOR	10 K	1/4 W	745-0785-000
R40	RESISTOR	2.67 K	1/4 W	705-1418-420
R41	RESISTOR, VARIABLE	2.5 K		380-3761-050
R42	RESISTOR, VARIABLE	100		380-3761-010
R43	RESISTOR	4.64 K	1/4 W	705-1418-650
R44	RESISTOR	2.87 K	1/4 W	705-1418-450
R45	RESISTOR, VARIABLE	2.5 K		380-3761-200
R46	RESISTOR	1 K	1/4 W	745-0749-000
R47	RESISTOR	33	1/4 W	745-0695-000
R48	RESISTOR	12.1 K	1/8 W	705-1454-650
R49	RESISTOR	237	1/8 W	705-1454-240
R50	RESISTOR	4.22 K	1/8 W	705-1454-540
R51	RESISTOR	10 K	1/4 W	745-0785-000
R52	RESISTOR	10 K	1/4 W	745 0785-000
R53	RESISTOR	4.22 K	1/8 W	705-1454-540
R54	RESISTOR	12.1 K	1/8 W	705-1454-650
R55	RESISTOR	237	1/8 W	705-1454-240
R56	RESISTOR	1 K	1/4 W	745-0749-000
R57	RESISTOR	3.32 K	1/4 W	705-1418-510
R58	RESISTOR	100	1/4 W	745-0713-000
R59	RESISTOR	6.81 K	1/4 W	705-1418-810
R60	RESISTOR	3.32 K	1/4 W	705-1418-510
R61	RESISTOR	33	1/4 W	745-0695-000
R62	RESISTOR	10 K	1/4 W	745-0785-000
R63	RESISTOR	10 K	1/8 W	705-1454-630
R64	RESISTOR	2.7 K	1/4 W	745-0764-000
R65	RESISTOR	274	1/8 W	705-0969-000
R66	RESISTOR	274	1/8 W	705 0969-000
R67	RESISTOR	274	1/8 W	705-0969-000
R68	RESISTOR	274	1/8 W	705 0969-000
R69	RESISTOR	154	1/8 W	705-0957-000
R70	RESISTOR	1.5 K	1/4 W	745-0755-000
R71	RESISTOR	1 K	1/4 W	745-0749-000
R72	RESISTOR	10 K	1/4 W	745-0785-000
R73	RESISTOR	1 K	1/4 W	745-0749-000
R74	RESISTOR	10 K	1/4 W	745-0785-000
R75	RESISTOR	470	1 W	745-3338-000
R76	RESISTOR	100	2 W	745-5610-000
R77	RESISTOR	1.8 K	1/4 W	745-0758-000
R78	RESISTOR	100	1/4 W	745-0713-000
R79	RESISTOR	22 K	1/4 W	745-0797-000
R80	RESISTOR	39	1/4 W	745-0698-000
R81	RESISTOR	10 K	1/4 W	745-0785-000
R82	RESISTOR	1 K	1/4 W	745-0749-000
R83	RESISTOR	10 K	1/4 W	745-0785-000
RT1	RESISTOR, THERMAL	1 K	1 W	714-1732-000
RT2	RESISTOR, THERMAL	10 K	1 W	714-0182-000
T1	TRANSFORMER, AUDIO INPUT			667-0187-030

D-2041 (9-65)

www.SteamPoweredRadio.com

SYMBOL	DESCRIPTION		COLLINS PART NUMBER
T2	TRANSFORMER, AUDIO INPUT		667 0187-030
U1	INTEGRATED CIRCUIT	A739C	351-1175-010
U2	INTEGRATED CIRCUIT	A723C	351-1035-020
VR1	ZENER DIODE	1N4751A	353-6481-470
VR2	ZENER DIODE	1N4753A	353-6481-510
XK1	SOCKET, RELAY		220-0027-010
XU1	SOCKET, INTEGRATED CIRCUIT		220-0001-010
XU2	INSULATOR, DISC		352-9552-060

D-2041 (9-65)

www.SteamPoweredRadio.com

www.SteamPoweredRadio.com

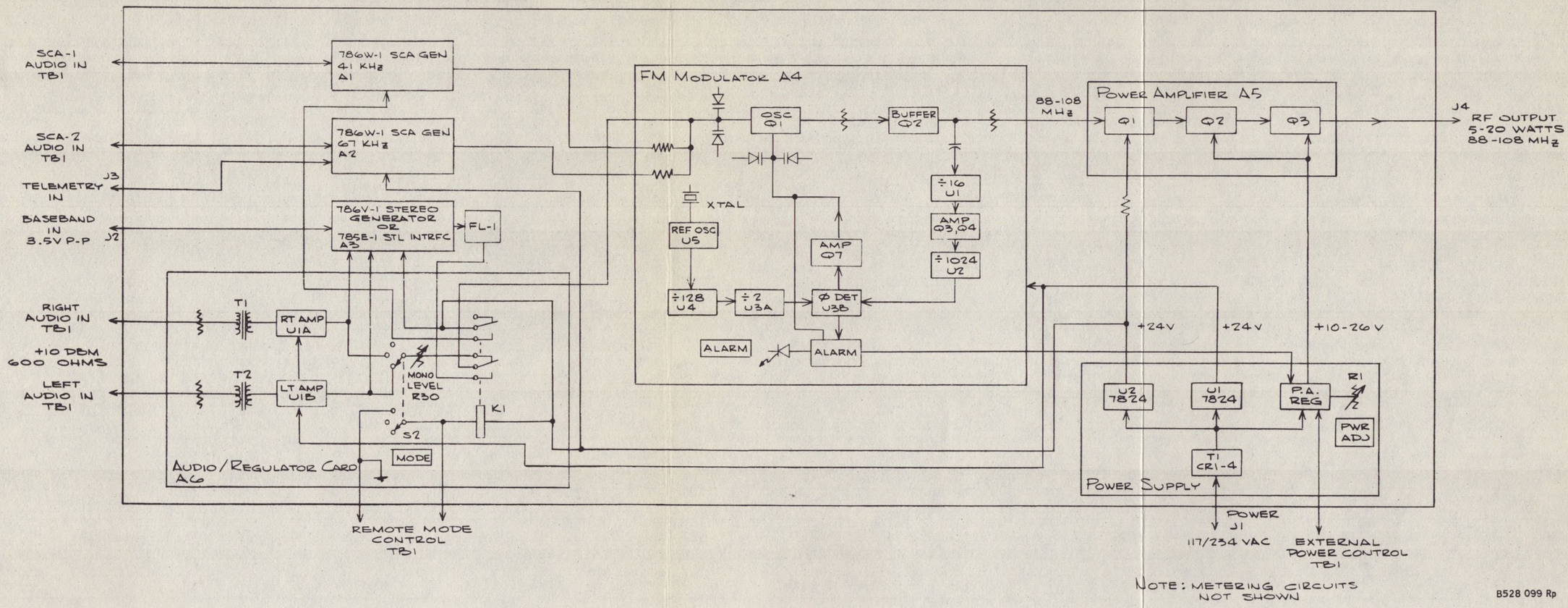

B528 099 Rp

USER MANUAL WIKI.COM

If You Didn't Get This From My Site,
Then It Was Stolen From....
www.SteamPoweredRadio.com

Figure 7-1. 310Z-2 FM Exciter, Detail Block Diagram.

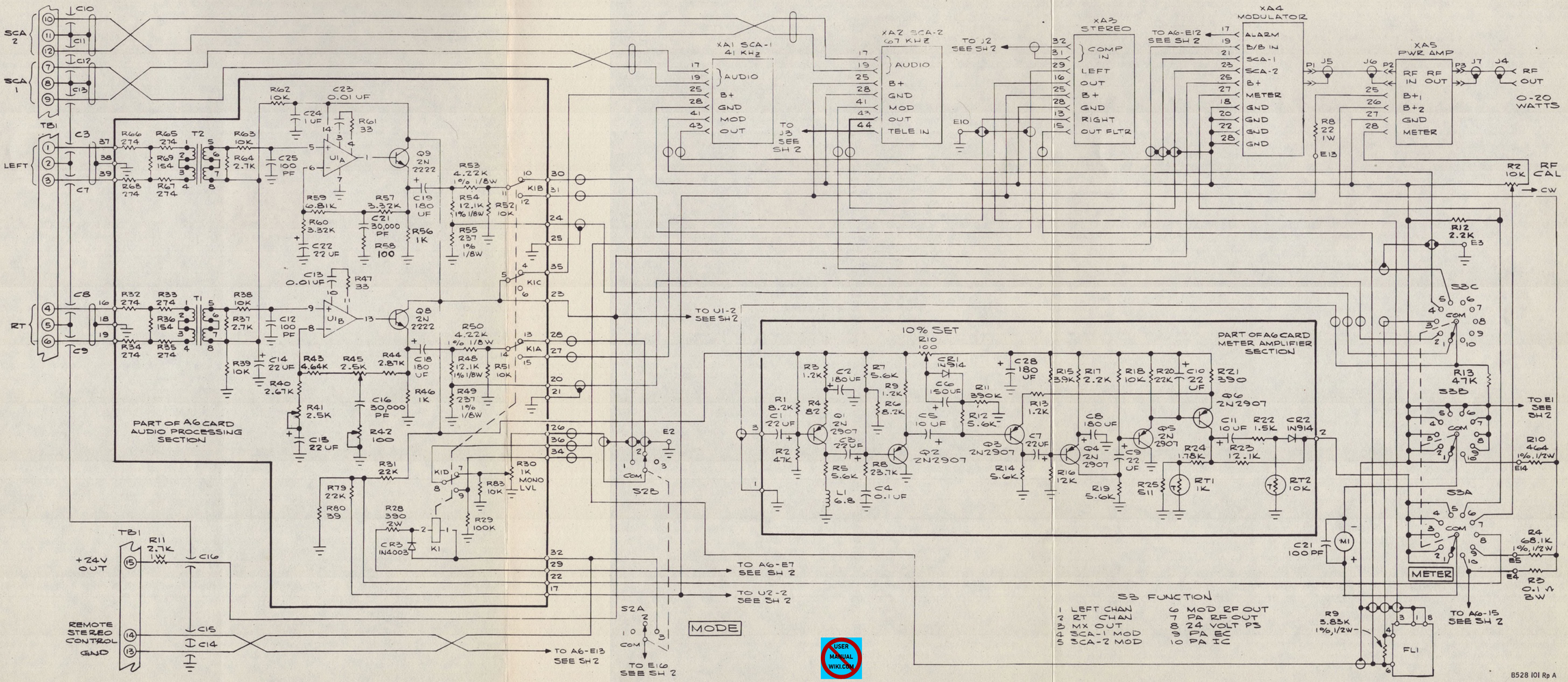

If You Didn't Get This From My Site,
Then It Was Stolen From....
www.SteamPoweredRadio.com

Figure 7-2. 310Z-2 FM Exciter Main Frame, Schematic Diagram (Sheet 1 of 2).

7824=MAX. 40V IN

POWER CONNECTIONS		
VOLTAGE	LINE	JUMPER
117 VAC	1-5	1-3, 2-4
234 VAC	1-5	2-3

NOTES:
1. FUNCTIONS CONTAINED IN BLOCKS DENOTE FRONT PANEL MOUNT COMPONENTS (WITH EXCEPTION OF J1 POWER CONN)
2. UNLESS OTHERWISE SPECIFIED RESISTORS ARE 1/4 WATT 10% CARBON
3. CAPACITORS C3,7-17 ARE 1000 PF, 500V FEED-THRU TYPE

USER MANUAL WIKI.COM
If You Didn't Get This From My Site, Then It Was Stolen From.... www.SteamPoweredRadio.com

Figure 7-2. 310Z-2 FM Exciter Main Frame, Schematic Diagram (Sheet 2 of 2).

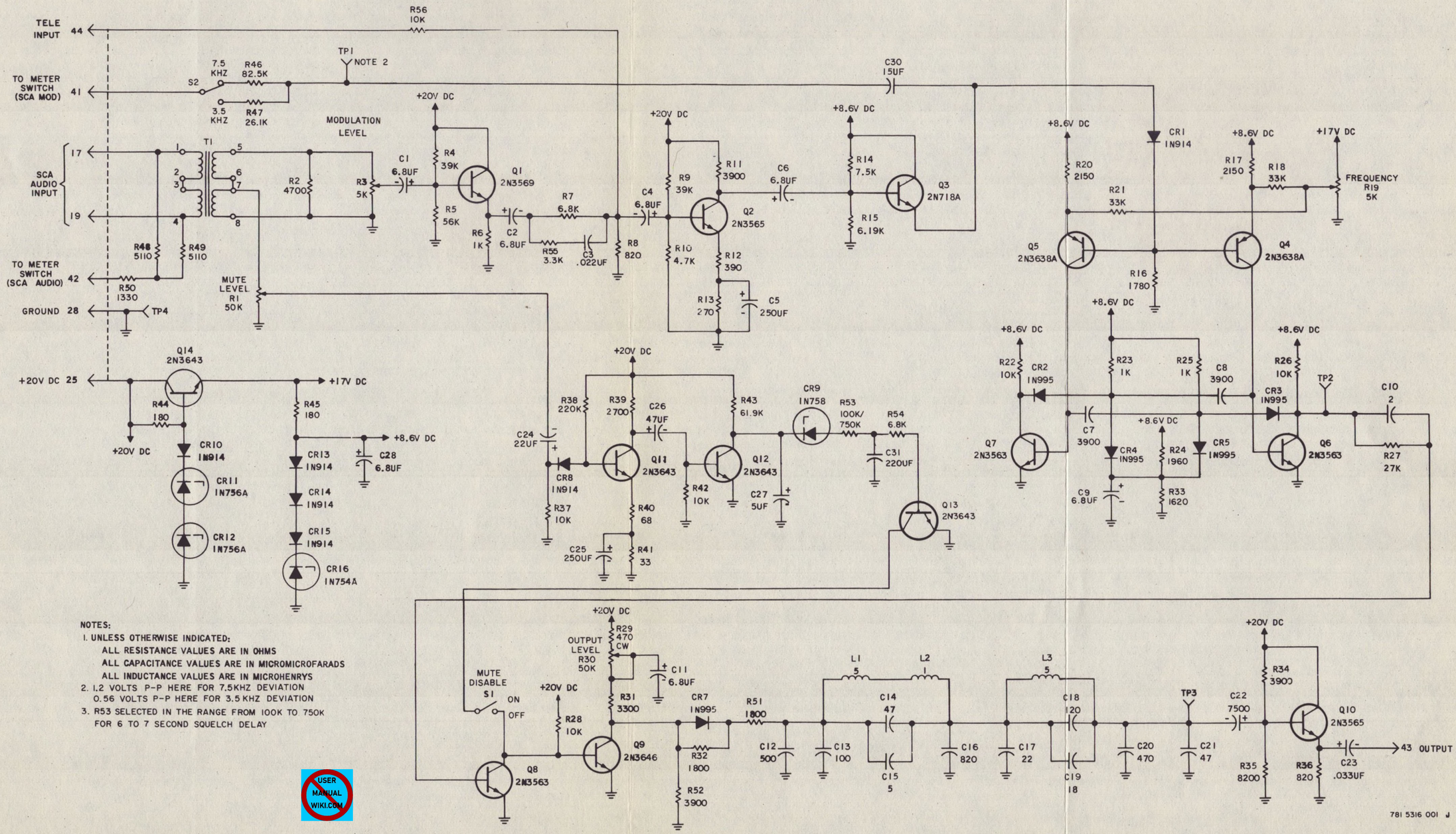

NOTES:

1. UNLESS OTHERWISE INDICATED:
   ALL RESISTANCE VALUES ARE IN OHMS
   ALL CAPACITANCE VALUES ARE IN MICROMICROFARADS
   ALL INDUCTANCE VALUES ARE IN MICROHENRYS
2. 1.2 VOLTS P-P HERE FOR 7.5KHZ DEVIATION
   0.56 VOLTS P-P HERE FOR 3.5 KHZ DEVIATION
3. R53 SELECTED IN THE RANGE FROM 100K TO 750K FOR 6 TO 7 SECOND SQUELCH DELAY

USER MANUAL WIKI.COM

If You Didn't Get This From My Site,
Then It Was Stolen From....
www.SteamPoweredRadio.com

Figure 7-3. 786W-1 SCA Generators A1/A2, Schematic Diagram.

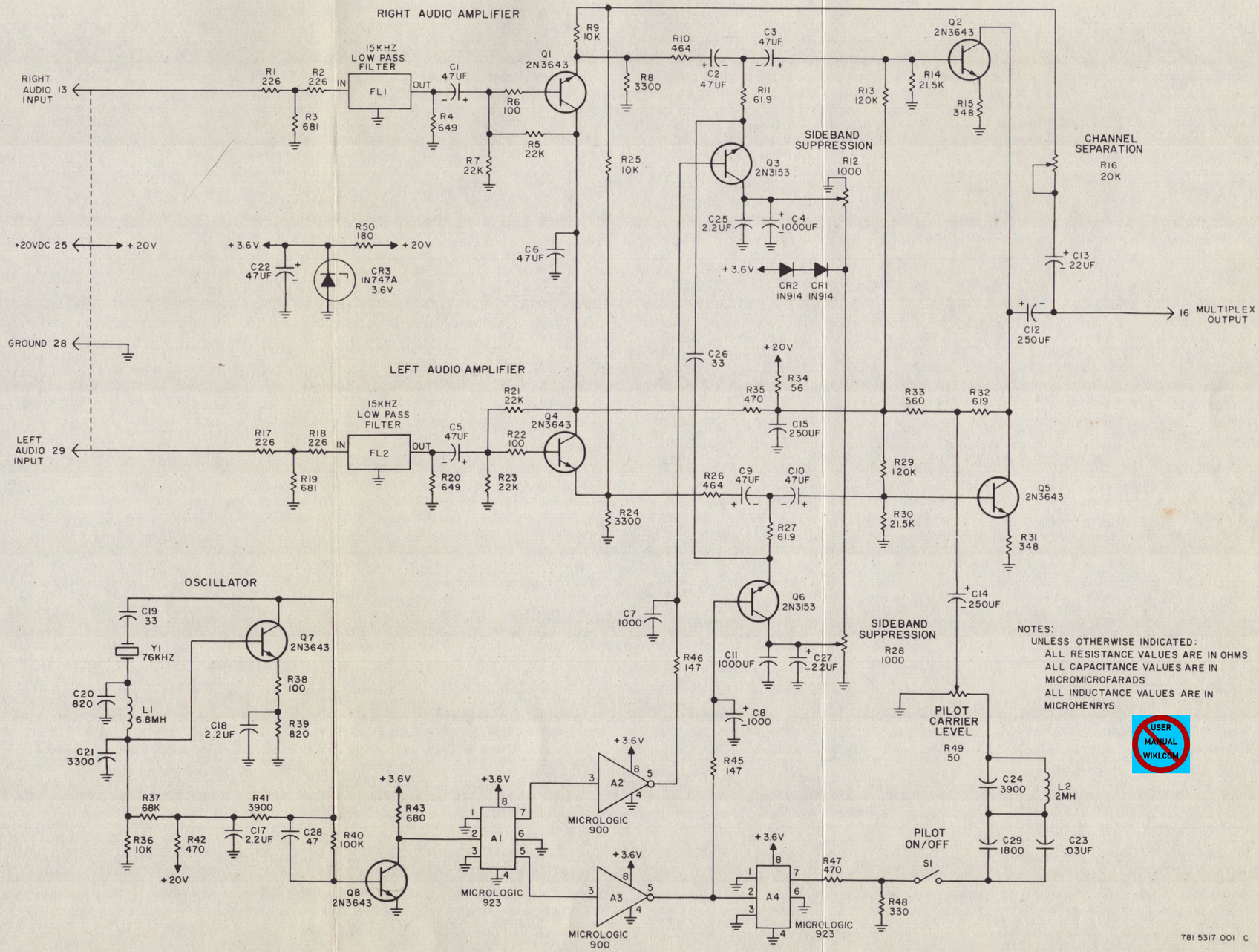

USER MANUAL WIKI.COM

If You Didn't Get This From My Site,
Then It Was Stolen From....
www.SteamPoweredRadio.com

Figure 7-4. 786V-1 Stereo Generator A3, Schematic Diagram.

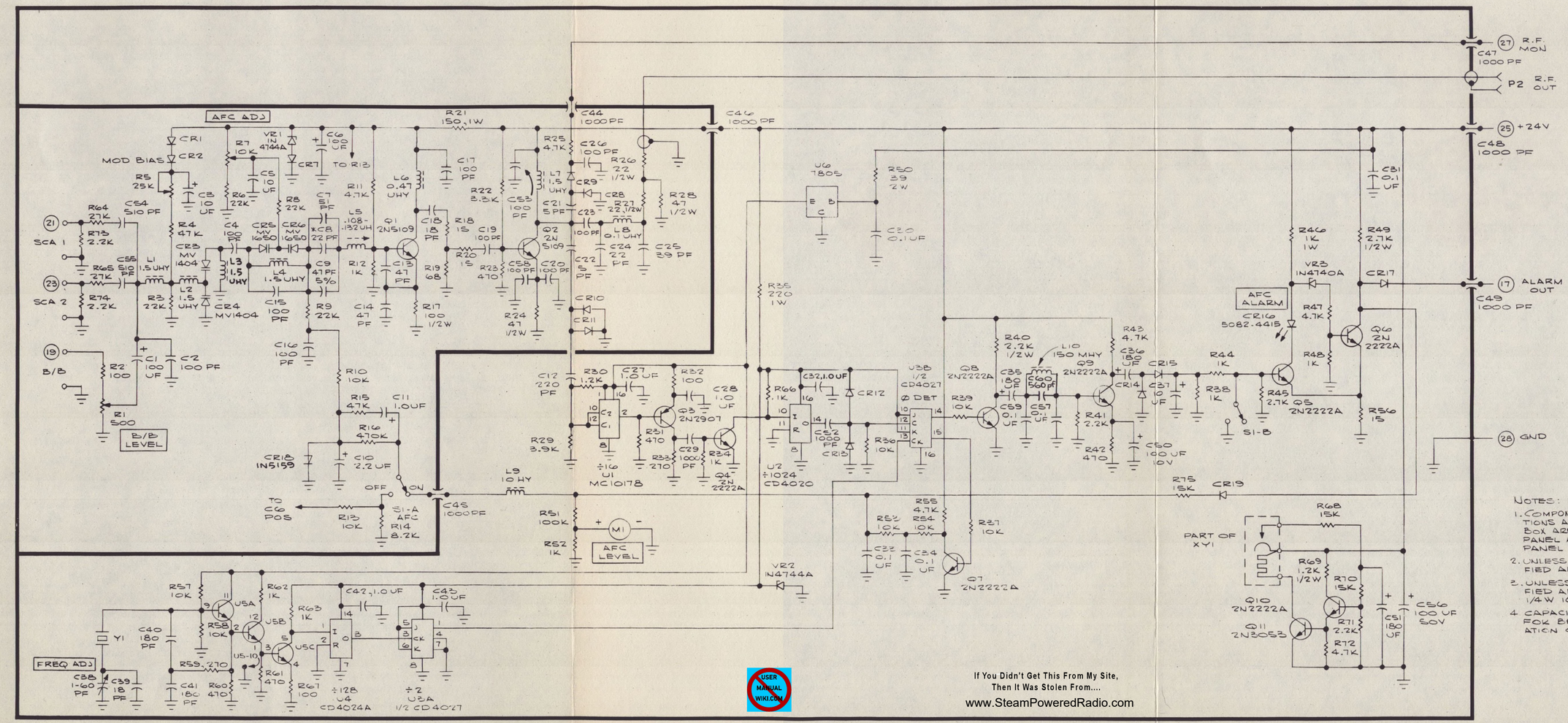

USER MANUAL WIKI.COM
If You Didn't Get This From My Site,
Then It Was Stolen From....
www.SteamPoweredRadio.com

Figure 7-5. FM Modulator A4, Schematic Diagram.

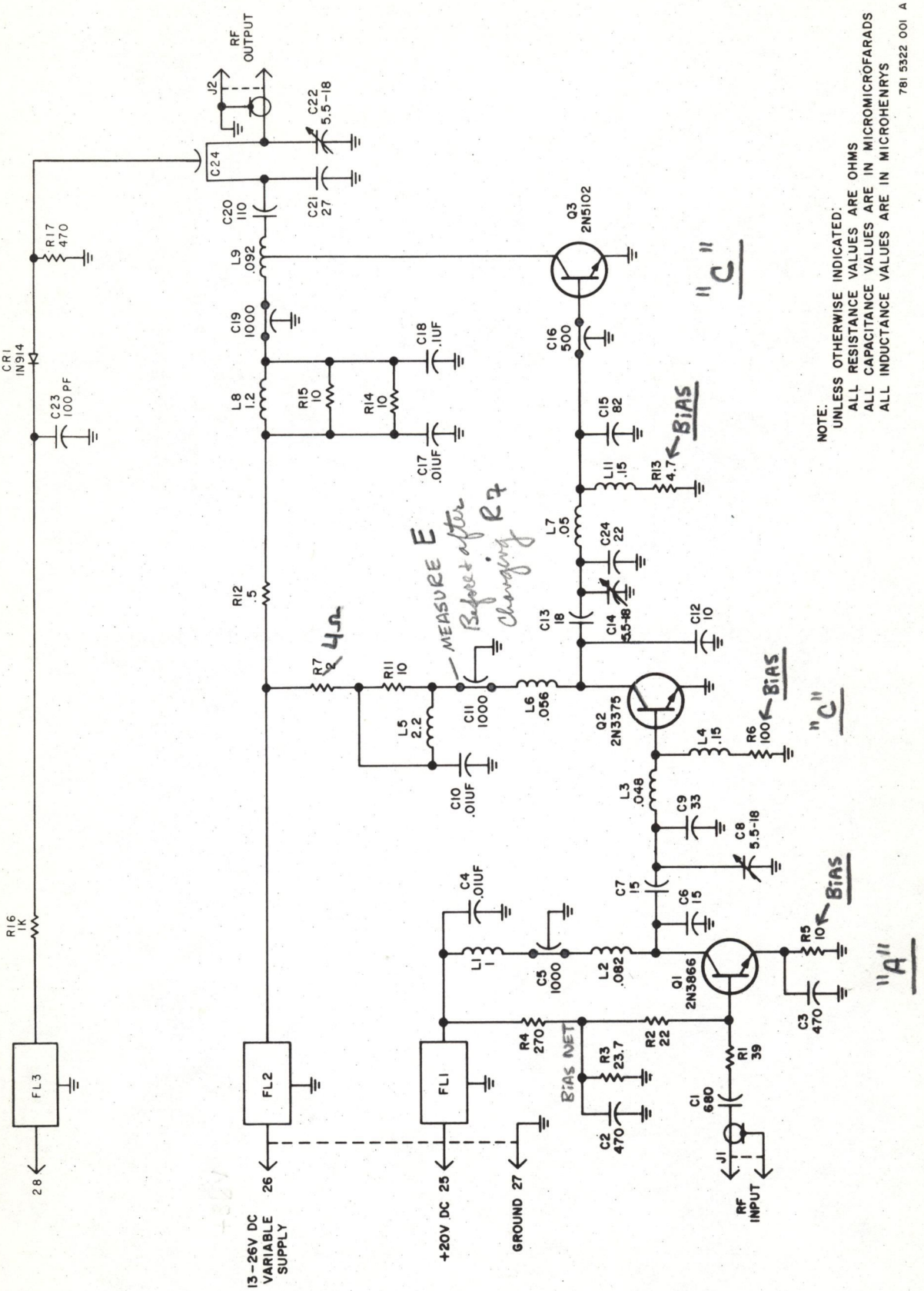

Figure 7-6. RF Amplifier A5, Schematic Diagram.

If You Didn't Get This From My Site,
Then It Was Stolen From....
www.SteamPoweredRadio.com

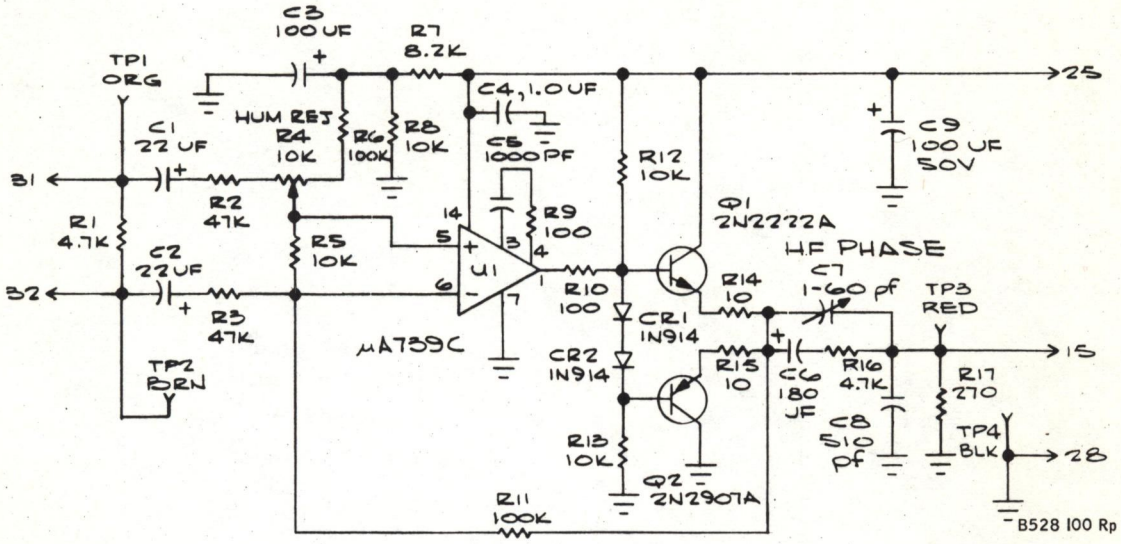

Figure 7-7. 785E-1 STL Interface Card A3, Schematic Diagram.

If You Didn't Get This From My Site,
Then It Was Stolen From....
www.SteamPoweredRadio.com



Rockwell
International

www.SteamPoweredRadio.com